Ionic 4,4′-Biphenylene-Bridged Bis-ruthenium Complexes $[Ru_2(4,4'\text{-}\{C_6H_2(CH_2NMe_2)_2\text{-}2,6\}_2)(terpy)_2]^{n+}$ (n = 2 and 4) and Their Reversible Redox Interconversion: A Molecular Switch

Pablo Steenwinkel,† David M. Grove,† Nora Veldman,‡ Anthony L. Spek,‡,§ and Gerard van Koten*,†

Debye Institute, Department of Metal-Mediated Synthesis, and Bijvoet Institute for Biomolecular Research, Department of Crystal and Structural Chemistry, Utrecht University, Padualaan 8, 3584 CH Utrecht, The Netherlands

Received June 16, 1998

Copper(II)-mediated oxidative coupling of the blue, 18-electron mononuclear complex $[Ru^{II}\text{-}\{C_6H_3(CH_2NMe_2)_2\text{-}2,6\}(terpy)]Cl$, **3** (terpy = 2,2′;6′,2″-terpyridine), affords the unique diamagnetic, binuclear 34-electron complex $[(Ru^{III})_2(4,4'\text{-}\{C_6H_2(CH_2NMe_2)_2\text{-}2,6\}_2)(terpy)_2](CuCl_2)_4$, **5a**. This intensely green complex has been the subject of an X-ray crystal structure determination, and the molecular geometry of the tetracation shows the C4−C4′-coupled bridging biphenylene dianion to be planar. Two-electron reduction of this tetracation as its PF_6^- salt, **5b**, with $N_2H_4{\cdot}H_2O$ affords the corresponding dicationic intensely blue, 36-electron complex $[(Ru^{II})_2(4,4'\text{-}\{C_6H_2(CH_2NMe_2)_2\text{-}2,6\}_2)(terpy)_2](PF_6)_2$, **8**. An X-ray crystal structure determination of **8** shows a molecular geometry in which the bridging biphenylene dianion is nonplanar, with the metal coordination planes twisted by ca. 36° relative to each other. Cyclic voltammetry data show that the reduction of **5b** (4+) to **8** (2+), i.e., $[Ru^{III}-Ru^{III}]$ to $[Ru^{II}-Ru^{II}]$, is reversible. This reduction proceeds through the mixed valence 35-electron $[Ru^{II}-Ru^{III}]$ complex $[(Ru^{II})(Ru^{III})(4,4'\text{-}\{C_6H_2(CH_2NMe_2)_2\text{-}2,6\}_2)(terpy)_2]^{3+}$, **9** (3+), which is intensely purple and which can be independently prepared by mixing acetonitrile solutions of equimolar amounts of **5** (4+) and **8** (2+).

Introduction

Organometallic and coordination complexes with more than one redox active metal center are potential building blocks (especially when the metal centers are separated by a π-conjugating spacer group) for well-defined, metal-containing, linear polymers with conductive properties.[1] Such conducting materials and their multimetallic building blocks have potential application in diverse fields of energy and electron transfer, molecular devices, and photoinduced charge separation, and they are thus a topic of current interest.[2]

The degree of electronic communication that is created when two multivalent metal centers are incorporated in a bimetallic system strongly depends on several factors such as the type of the bridging ligand, the intramolecular distance between the metal centers, and the nature of other (spectator) ligands around the metal centers.[3] The nature of the latter ligands is of crucial importance with respect to the efficiency with which one metal center of a mixed valence species can transfer its electron(s) through a bridging ligand to the other metal center.

Although only a few binuclear organoruthenium complexes containing bridging carbon-ligating ligands have been prepared, they do show a variety of electronic properties. For example, the recently reported species[4] illustrated in Figure 1 exhibit relatively high degrees of electronic communication through oligophenylene bridges between ruthenium and/or osmium centers that are coordinated by terpyridine; these species contain a bridging bis-*N,C,N*′-terdentate coordinating ligand, such as 2,2′,6,6′-tetrakis(2-pyridyl)-4,4′-biphenylene (n = 0).

* To whom correspondence should be addressed. Tel.: +31302533120. Fax: +31302523615. E-mail: g.vankoten@chem.uu.nl.

† Debye Institute.

‡ Bijvoet Institute for Biomolecular Research.

§ Address correspondence pertaining to crystallographic studies to this author. E-mail: a.l.spek@chem.uu.nl.

(1) (a) Sauvage, J.-P.; Collin, J.-P.; Chambron, J. C.; Guillerez, S.; Coudret, C.; Balzani, V.; Barigelletti, F.; DeCola, L.; Flamigni, L. *Chem. Rev.* **1994**, *94*, 993. (b) Constable, E. C.; Ward, M. D. *J. Chem. Soc., Dalton Trans.* **1990**, 1405. (c) Constable, E. C.; Cargill Thompson, A. M. W. *J. Chem. Soc., Dalton Trans.* **1992**, 3467. (d) Constable, E. C.; Cargill Thompson, A. M. W.; Harveson, P.; Macko, L.; Zehnder, M. *Chem. Eur. J.* **1995**, *1*, 360. (e) Grosshenny, V.; Harriman, A.; Ziessel, R. *Angew. Chem., Int. Ed. Engl.* **1995**, *34*, 1100. (f) Bruce, M. I.; Koutsantonis, G. A.; Lidell, M. J.; Tiekink, E. R. T. *J. Organomet. Chem.* **1991**, *420*, 253.

(2) (a) Long, N. J. *Angew. Chem., Int. Ed. Engl.* **1995**, *34*, 21. (b) Harriman, A.; Odobel, F.; Sauvage, J.-P. *J. Am. Chem. Soc.* **1994**, *116*, 5481. (c) Barigelletti, F.; Flamigni, L.; Balzani, V.; Collin, J.-P.; Sauvage, J.-P.; Sour, A.; Constable, E. C.; Cargill Thompson, A. M. W. *Coord. Chem. Rev.* **1994**, *132*, 209. (d) Barigelletti, F.; Flamigni, L.; Balzani, V.; Collin, J.-P.; Sauvage, J.-P.; Sour, A.; Constable, E. C.; Cargill Thompson, A. M. W. *J. Am. Chem. Soc.* **1994**, *116*, 7692. (e) Balzani, V.; Scandola, F. *Supramolecular Photochemistry*; Horwood: Chichester, U.K., 1991. (f) Hammarström, L.; Barigelletti, F.; Flamigni, L.; Armaroli, N.; Sour, A.; Collin, J.-P.; Sauvage, J.-P. *J. Am. Chem. Soc.* **1996**, *118*, 11972.

(3) Patoux, C.; Launay, J.-P.; Beley, M.; Chodorowski-Kimmes, S.; Collin, J.-P.; James, S. L.; Sauvage, J.-P. *J. Am. Chem. Soc.* **1998**, *120*, 3717.

(4) (a) Beley, M.; Chodorowski, S.; Collin, J.-P.; Sauvage, J.-P. *Tetrahedron Lett.* **1993**, *34*, 2933. (b) Beley, M.; Chodorowski-Kimmes, S.; Collin, J.-P.; Lainé, P.; Launay, J.-P.; Sauvage, J.-P. *Angew. Chem., Int. Ed. Engl.* **1994**, *33*, 1775.

10.1021/om980495p CCC: $15.00
Publication on Web 11/20/1998

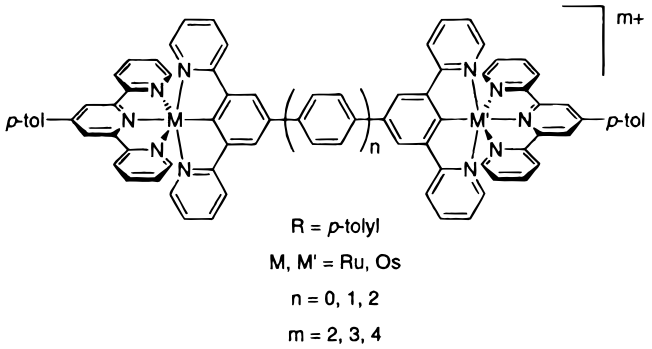

Figure 1. Schematic representation of some ruthenium and/or osmium complexes which show a high degree of electronic communication.

Scheme 1. Synthetic Procedure Used for the Preparation of the Neutral 16-Electron NCN−Ruthenium(II) Complexes 2 and Their Ionic Terpyridine Derivatives 3

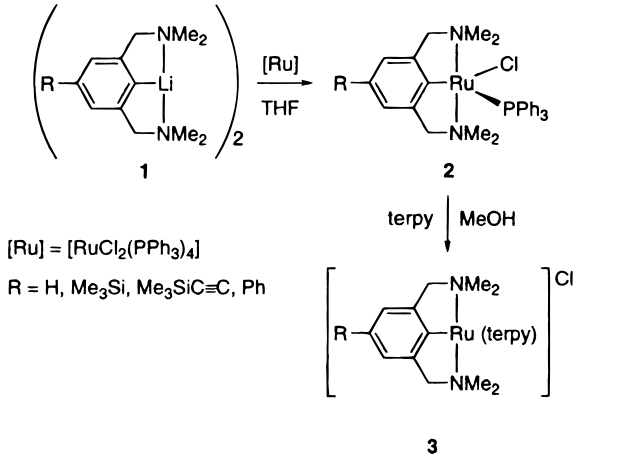

In many of our studies we have used a structurally related potentially *N,C,N′*-terdentate coordinating ligand $[C_6H_3(CH_2NMe_2)_2\text{-}2,6]^-$ (NCN),[5] as in this system the presence of tertiary amine groups leads to electron delocalization being concentrated in the aryl group. Recently, we employed both NCN and para-functionalized NCN ($[C_6H_2(CH_2NMe_2)_2\text{-}2,6\text{-}R\text{-}4]^-$ = NCN−R-4) as ligands for the synthesis of a series of 16-electron complexes [RuCl(NCN−R-4)(PPh_3)], **2**, and their ionic terpyridine derivatives [Ru(NCN−R-4)(terpy)]Cl, **3** (terpy = 2,2′;6′,2″-terpyridine), which are presented schematically in Scheme 1; in these complexes R was Me_3Si, $Me_3SiC{\equiv}C$, Ph, and H (corresponding to nonfunctionalized NCN).[6]

In an investigation of the redox properties of the nonfunctionalized NCN ruthenium(II) complex **3** (R = H) we studied its reaction with $CuCl_2$ in MeOH. Surprisingly, a bimetallic tetracationic ruthenium(III) species $[(Ru^{III})_2(4,4'\text{-}\{C_6H_2(CH_2NMe_2)_2\text{-}2,6\}_2)(terpy)_2]^{4+}$, **5**, with four $CuCl_2$ monoanions was obtained in high yield. We briefly communicated these results,[7] and in this paper we now report full details of the complete synthesis and characterization of **5** together with results from investigations of its redox properties. The X-ray crystal structure of its reduced $[Ru^{II}-Ru^{II}]$ complex $[(Ru^{II})_2(4,4'\text{-}\{C_6H_2(CH_2NMe_2)_2\text{-}2,6\}_2)(terpy)_2]^{2+}$, **8**, is presented and this structure is compared with that of $[Ru^{III}-Ru^{III}]$ complex **5**, reported earlier.[7]

Scheme 2. Copper(II)-Mediated Oxidative C−C Bond Formation Reaction To Afford the Novel Dinuclear Complex Tetracation of Bis-ruthenium(II) Compound 5

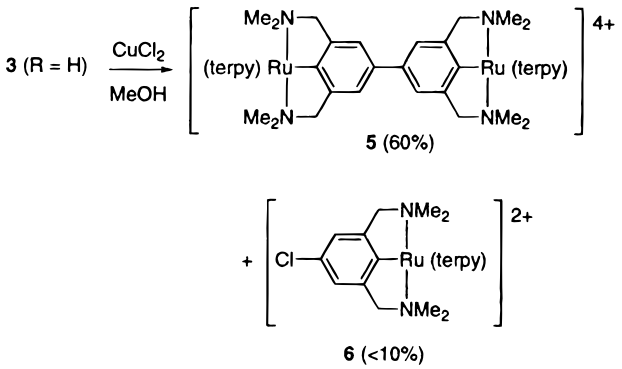

Results

Synthesis and Characterization of Bis-ruthenium(III) Species $[(Ru^{III})_2(4,4'\text{-}\{C_6H_2(CH_2NMe_2)_2\text{-}2,6\}_2)(terpy)_2](X)_4$ (X = $CuCl_2^-$ (5a), PF_6^- (5b)). Treatment of an aqueous, blue solution of the 18-electron mononuclear complex $[Ru^{II}\{C_6H_3(CH_2NMe_2)_2\text{-}2,6\}(terpy)]Cl$, **3**, with an aqueous solution of $CuCl_2$, leads to the in situ formation of the red oxidized 17-electron mono-ruthenium(III) complex $[Ru^{III}\{C_6H_3(CH_2NMe_2)_2\text{-}2,6\}(terpy)](X)_2$, **4** ($X^-$ is probably Cl^- or $CuCl_2^-$), which is stable in water, and which has been obtained by precipitation as its bis(hexafluorophosphate) salt. Reduction of this complex with $N_2H_4{\cdot}H_2O$ or ascorbic acid reaffords the starting material **3**.

In dry MeOH the reaction of a solution of NCN ruthenium(II) complex **3** with 3 equiv of $CuCl_2$, under a nitrogen atmosphere, is more complex than the same reaction in water. When solid $CuCl_2$ is added to a MeOH solution of **3**, the heterogeneous reaction mixture immediately turns deep red and after 17 h at room temperature, evaporation in vacuo affords a dark red solid residue, which becomes deep green when dissolved in MeCN. Analytical data (TLC, ^1H NMR, FAB-MS and cyclic voltammetry) suggested the presence of three products in the reaction mixture (Scheme 2) and column chromatography (silica gel, eluent MeCN/H_2O/KNO_3(aq) mixtures), as detailed in the Experimental Section, was used to separate the mixture into three different complex-containing fractions. The fractions were all concentrated and treated with a saturated aqueous NH_4PF_6 whereby the products precipitated. The first (blue) fraction (eluted with a 6/3/1 mixture of the three solvents) contained the starting material, **3** (identified by NMR spectroscopy, see Table 1).[6a] Further elution

(5) (a) van Koten, G. *Pure Appl. Chem.* **1989**, *61*, 1681, and references therein. (b) Rietveld, M. H. P.; Grove, D. M.; van Koten, G. *New J. Chem.* **1997**, *21*, 751, and references therein.

(6) (a) Sutter, J.-P.; James, S. L.; Steenwinkel, P.; Karlen, T.; Grove, D. M.; Veldman, N.; Smeets, W. J. J.; Spek, A. L.; van Koten, G. *Organometallics* **1996**, *15*, 941. (b) Steenwinkel, P.; James, S. L.; Grove, D. M.; Veldman, N.; Spek, A. L.; van Koten, G. *Chem. Eur. J.* **1996**, *2*, 1440.

(7) (a) Sutter, J.-P.; Grove, D. M.; Beley, M.; Collin, J.-P.; Veldman, N.; Spek, A. L.; Sauvage, J.-P.; van Koten, G. *Angew. Chem., Int. Ed. Engl.* **1994**, *33*, 1282. (b) Sutter, J.-P.; Beley, M.; Collin, J.-P.; Veldman, N.; Spek, A. L.; Sauvage, J.-P.; van Koten, G. *Mol. Cryst. Liq. Cryst.* **1994**, *253*, 215.

Table 1. Relevant ^{1}H NMR Data for the Monometallic Ruthenium Complexes 3 and 7 and for the Bimetallic Complexes 5b and 8 (CD_3CN Solution)

compd	ArH	CH_2	NMe_2
3	7.58	4.24[a]	1.12
5b	7.65	4.00[a]	1.27
7	7.24	3.60[a]	1.18
8	7.68	3.75	1.25

[a] Broad singlet.

with the same solvent mixture afforded a red fraction, shown to contain the new ruthenium(III) complex dication $[Ru^{III}\{C_6H_2Cl\text{-}4\text{-}(CH_2NMe_2)_2\text{-}2,6\}(terpy)]^{2+}$ (vide infra), containing a 4-chloro-substituted NCN ligand. This complex was isolated as its paramagnetic 17-electron PF_6^- salt, **6**, and was characterized by ^{1}H and ^{13}C NMR spectroscopy after reduction with $N_2H_4{\cdot}H_2O$ to the 18-electron complex $[Ru^{II}\{C_6H_2Cl\text{-}4\text{-}(CH_2NMe_2)_2\text{-}2,6\}(terpy)]PF_6$, **7** (see Experimental Section and Table 1). Further elution of the column with a more polar 5/5/1 mixture of the three solvents afforded a deep green fraction that contained the C4−C4′-coupled product, complex $[(Ru^{III})_2(4,4'\text{-}\{C_6H_2(CH_2NMe_2)_2\text{-}2,6\}_2)(terpy)_2](CuCl_2)_4$, **5a**, which has also been isolated as its corresponding PF_6 salt, **5b**.

For a binuclear 34-electron $[Ru^{III}-Ru^{III}]$ (d^5-d^5) complex such as **5**, one could expect that the paramagnetic ruthenium(III) centers would cause difficulties in NMR spectroscopy; the paramagnetic 17-electron mono-ruthenium(III) complexes, **4** and **6**, do not provide high-resolution ^{1}H NMR spectra. However, bimetallic complex **5b** has a ^{1}H NMR spectrum with sharp resonances that can be readily assigned (see Table 1). Chemical shift values are as expected for a diamagnetic species, i.e., 8.95−7.65 ppm for the resonances of the aromatic protons, and 4.00 and 1.27 ppm for the resonances of the N-donor CH_2NMe_2 groups. These resonance positions are similar to those found in the ^{1}H NMR spectrum of the starting material, the mononuclear 18-electron NCN ruthenium(II) complex **3**, and the ruthenium(II) complex **7** (the reduced form of the new 4-chloro-substituted NCN ruthenium complex, **6**, see Table 1). These data for **5b** suggest that there is a strong spin−spin coupling between the metal centers (electron delocalization) across the aromatic system of the bridging biphenylene dianion. Unfortunately, due to its the low solubility (even in polar solvents such as MeCN, MeOH, or H_2O), ^{13}C NMR spectroscopy of **5b** was not successful. The UV/vis spectrum of bis-ruthenium(III) complex **5b** (Table 2) is substantially different from that found for **3** and shows four absorptions, of which the band at 657 nm ($\epsilon = 11.70 \times 10^4$ M^{-1} cm^{-1}) causes the intense green color of its solution in MeCN.

The interesting NMR spectroscopic behavior of bis-ruthenium(III) complex **5b** prompted us to subject complex **5** to an X-ray crystallographic study, and details of this have been reported earlier.[7] This study showed **5a** to be an ionic species in which four $CuCl_2^-$ anions are counterbalanced by a bimetallic tetracation. For comparitive purposes (vide infra), the molecular structure and adopted numbering scheme of this tetracation is shown in Figure 2. Selected geometrical data of **5a** are collected in the legend of Figure 2 and in Table 3.

Table 2. UV/Vis Data for the Ruthenium Complexes 3−8 and 10 (MeCN Solutions)

complex	λ_{max} [nm] (ϵ [10^{-4} M^{-1} cm^{-1}])						
3	632 (0.55)	593 (0.53)	523 (0.52)	392 (0.59)	324 (3.07)	280 (2.31)	238 (2.15)
4	574 (0.55)	331 (3.45)	269 (16.05)				
5b	657 (11.70)	306 (3.84)	275 (4.66)	201 (17.03)			
6	548 (0.43)	331 (2.74)	273 (2.58)				
7	632 (0.70)	592 (0.77)	523 (0.68)	390 (0.75)	324 (3.87)	280 (3.01)	237 (2.89)
8	618 (1.58)	593 (1.67)	528 (1.81)	377 (3.72)	324 (7.30)	280 (5.95)	
10[a]	543 (3.06)	516 (3.06)	287 (11.29)	220 (6.75)			

[a] From ref 10a.

Within this tetracation there are two octahedrally coordinated ruthenium(III) centers that are bridged by a planar dianionic biphenylene unit that is σ-bonded to the metals through C(1) and C(1A) of the aromatic rings. Furthermore, each ruthenium center is not only N-donor coordinated by N(4) and N(5) of the two ortho-positioned CH_2NMe_2 substituents of the bridging biphenylene unit, i.e., the biphenylene ligand functions as a bis(*N,C,N′*-terdentate) coordinating system, but also terdentate coordinated by three N-donor atoms of a neutral terpyridine molecule.

The *N,C,N′*-terdentate coordination of the biphenylene ligand affords a metal-to-carbon bond length, Ru(1)−C(1), of 1.901(8) Å, and the Ru(1)−N(4) and Ru(1)−N(5) bonds have nearly identical lengths of 2.187(7) and 2.189(7) Å, respectively. As anticipated from crystallographic studies of NCN metal complexes the N(4)−Ru(1)−N(5) bond angle is, at 160.3(2)°, significantly less than 180°, and the resulting $C_{aryl}-Ru-N$ bite angles of the *N,C,N′*-coordination motif, C(1)−Ru(1)−N(4) and C(1)−Ru(1)−N(5) are 80.7(3) and 79.6(3)°, respectively. The coordinated terpyridine ligand affords three almost identical Ru−N bond lengths of ca. 2.07 Å. In the tetracation of **5a** the intramolecular Ru···Ru distance across the planar biphenylene bridge is 10.829(2) Å. The aromatic $C(sp^2)-C(sp^2)$ bond lengths in this bridging ligand differ noticeably, with values falling in the range of 1.36−1.44 Å. Furthermore, the central C4−C4′ bond linking the two aromatic rings has a bond length of 1.436(12) Å and thus shows a significant amount of double bond character. These structural data imply that there is a considerable degree of electron delocalization over the biphenylene bridge (see Discussion).

Cyclic voltammetry experiments reveal that the new 34-electron bis-ruthenium(III) complex **5** (4+) can be reversibly reduced and reoxidized in MeCN. From the electrochemical data collected in Table 4, one sees that the process involves two electrons, which are introduced (or removed) in two separate one-electron steps, with different redox potentials. In the first step, at +0.24 V, the $[Ru^{III}-Ru^{III}]$ complex **5**, is reduced to the mixed valence 35-electron $[Ru^{II}-Ru^{III}]$ species **9**. For some literature examples of mixed-valence bis-ruthenium complexes, see ref 8. In the second step, at +0.065 V, this mixed valence complex is further reduced to 36-electron $[Ru^{II}-Ru^{II}]$ complex **8**. These electrochemical studies prompted us to attempt the chemical synthesis

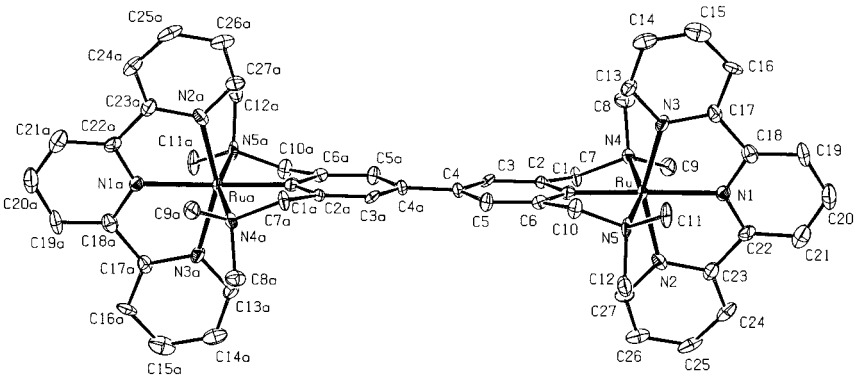

Figure 2. ORTEP drawing (50% probability atomic displacement ellipsoids) of the complex tetracation $[(Ru^{III})_2(4,4'\text{-}\{C_6H_2(CH_2NMe_2)_2\text{-}2,6\}_2)(terpy)_2]^{4+}$ of **5a**.[7a] Hydrogen atoms, cocrystallized solvent molecules, and the $CuCl_2^-$ counterions have been omitted for clarity. Selected bond distances in angstroms (esds in parentheses): Ru(1)−C(1), 1.901(8); Ru(1)−N(1), 2.069(6); Ru(1)−N(2), 2.062(8); Ru(1)−N(3), 2.073(7); Ru(1)−N(4), 2.187(7); Ru(1)−N(5), 2.189(7); C(4)−C(4)A, 1.436(12); Ru(1)···Ru(1)A, 10.829(2). Selected bond angles in degrees (esds in parentheses): C(1)−Ru(1)−N(4), 80.7(3); C(1)−Ru(1)−N(5), 79.6(3); N(4)−Ru(1)−N(5), 160.3(2).

Table 3. A Comparison of Some Selected Bond Parameters of the Dinuclear 4,4′-Biphenylene-Bridged Bis-ruthenium Complexes 5a (Ru^{III}−Ru^{III}) and 8 (Ru^{II}−Ru^{II}) and of the Related Bis-ruthenium(II) Complex 10[a] (esds in Parentheses)

compd	**5a**	**8**	**10**[a]
	Bond Distances		
Ru(1)−C(1)	1.901(8)	2.003(16)/2.002(16)	1.96(2)/1.96(1)
C(4)−C(4)A	1.436(12)	1.47(3)	1.51(1)
Ru(1)···Ru(1)A	10.829(2)	11.066(3)	11.009(2)
Ar−Ar dihedral angle[b]	0(4)	36(2)	22.2(7)

[a] From ref 10a. [b] Dihedral angle between the phenylene rings of the bridging 4,4′-biphenylene moiety.

Table 4. Electrochemical Data of Complexes 3, 5b, 6, and 10 in MeCN

	$E_{1/2}$ [V] vs SCE				
complex	III/II[b]	III,III/III,II[b]	III,II/II,II[b]	II,I[b,c]	K_c[a]
3	0.23			−1.63	
5b		0.24	0.065	−1.66	900
6	0.27				
10[d]		0.505	0.34	−1.55	600

[a] Comproportionation constant. [b] III,II = reduction potential of $[Ru^{III}]$ to $[Ru^{II}]$; III,III/III,II = reduction potential of $[Ru^{III}$−$Ru^{III}]$ to $[Ru^{II}$−$Ru^{III}]$. [c] This situation most probably involves the ligand-located reduction of terpy or tterpy. [d] From ref 10a.

of the bis-ruthenium(II) species to enable further investigation of its spectroscopic and structural properties.

Treatment of a green solution of **5b** in CH_2Cl_2 with excess of $N_2H_4{\cdot}H_2O$ or ascorbic acid leads to a rapid color change of the reaction mixture to deep blue, corresponding to the formation of a bis-ruthenium(II) species (Scheme 3). Appropriate workup (see Experimental Section) affords the blue microcrystalline bis-ruthenium(II) complex, $[(Ru^{II})_2(4,4'\text{-}\{C_6H_2(CH_2NMe_2)_2\text{-}2,6\}_2)(terpy)_2](PF_6)_2$, **8**, in 94% yield. The ^1H and ^{13}C NMR spectra of a CD_3CN solution of this diamagnetic (d^5−d^5) complex show the expected resonances for the terpyridine ligand and the bridging bis-*N,C,N′*-terdentate coordinating biphenylene ligand (Table 1). The NMR spectroscopic data of **8** are similar to those found for the starting material of the copper(II)-mediated coupling reaction, i.e., mononuclear NCN ruthenium(II) complex **3**. Furthermore, the UV/vis spectra, i.e.,

Scheme 3. Reversible Two-Electron Reduction and Oxidation of Complex 5

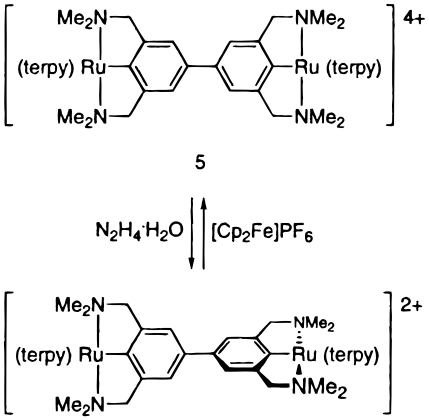

the colors, of **8** and **3** are similar, but substantially different from that of **5b** (see Table 2). These spectroscopic data suggest that electronic communication between the two metal centers in the bimetallic complex **8** is rather limited.

Recrystallization of **8**, by slow evaporation of a H_2O/MeCN solution with a N_2 stream, afforded analytically pure, dark blue crystals of **8** that were suitable for an X-ray analysis. The crystallographic study shows **8** to be an ionic species in which two PF_6^- anions are counterbalanced by a bimetallic dication, whose molecular structure with adopted numbering scheme is shown in Figure 3. Selected geometrical data are collected in the legend of Figure 3 and in Table 3. Crystal data of **8** are collected in Table 5. It should be noted here that due to some degree of disorder in the crystal lattice of **8** and the rather weak diffraction of the crystal employed (see Experimental Section) the final *R* value of 0.1129 is somewhat high; the overall refined structure of **8** is unambiguous but individual geometrical parameters should be interpreted with appropriate care with regard to the esd values.

Like the tetracation of **5a**, the dication of **8** contains a dianionic biphenylene ligand that bridges two identical octahedrally coordinated metal centers. Each metal center has a coordination sphere resulting from terden-

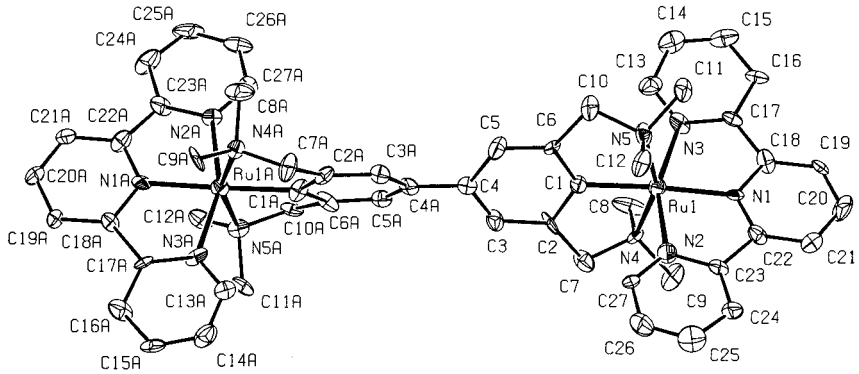

Figure 3. ORTEP drawing (50% probability atomic displacement ellipsoids) of the complex dication $[(Ru^{II})_2(4,4'\text{-}\{C_6H_2(CH_2NMe_2)_2\text{-}2,6\}_2)(terpy)_2]^{2+}$ of **8**. Hydrogen atoms, cocrystallized solvent molecules, and PF_6^- counterions have been omitted for clarity. Selected bond distances in angstroms (esds in parentheses): Ru(1)−C(1), 2.003(16)/2.002(16); Ru(1)−N(1), 2.003(16)/2.002(14); Ru(1)−N(2), 2.085(16)/2.089(15); Ru(1)−N(3), 2.094(15)/2.092(15); Ru(1)−N(4), 2.176(13)/2.171(13); Ru(1)−N(5), 2.164(13)/2.156(13); C(4)−C(4)A, 1.47(3); Ru(1)···Ru(1)A, 11.066(3). Selected bond angles in degrees (esds in parentheses): C(1)−Ru(1)−N(4), 78.3(6)/79.2(6); C(1)−Ru(1)−N(5), 77.9(7)/77.5(6); N(4)−Ru(1)−N(5), 156.1(6)/156.6(6).

Table 5. Crystal Data and Details of the Structure Determination for 8

Crystal Data	
empirical formula	$C_{54}H_{58}F_{12}N_{10}P_2Ru_2{\cdot}5H_2O$
fw	1429.26
cryst syst	monoclinic
space group	$P2_1/c$ (No. 14)
a, Å	9.8891(1)
b, Å	19.557(1)
c, Å	32.347(1)
α, β, γ, deg	104.50(1)
V, Å^3	6056.7(5)
D_{calcd}, g cm^{-3}	1.557
Z	4
F(000), e	2912
μ (Mo Kα), cm^{-1}	6.4
cryst size, mm	0.15 × 0.15 × 0.40
Data Collection	
T, K	150
$\theta_{min}, \theta_{max}$, deg	1.2, 21.0
wavelength (Mo Kα), Å	0.71073 (graphite monochromated)
scan type/range	0.80 + 0.35 tanθ
data set	−9:0, 0:19, −31:32
total data	6604
total unique data	6303
R_{int}	0.126
obsd data [$I > 2.0\ \sigma(I)$]	3021
Refinement	
N_{ref}, N_{par}	6303, 777
final $R1$ [a]	0.1129
final $wR2$ [b]	0.2743
GOF	1.04
w^{-1} [c]	$\sigma^2(F^2) + (0.0416P)^2 + 212.9162P$, where $P = (F_o^2 + 2F_c^2)/3$
$(\Delta/\sigma)_{av}$, $(\Delta/\sigma)_{max}$	0.00, 0.03
min and max residual density, e Å^{-3}	−0.76, 0.76

tate N-donor coordination of the terpyridine ligand and N,C,N'-terdentate coordination from the bridging ligand system. However, the fact that both metal centers in **8** are Ru^{II} results in the dication having some geometrical features which are distinctly different from those of the tetracation of **5a**. For example, the dianionic bridging biphenylene unit of **8** is not planar, but shows a dihedral angle between the two aryl rings of 36°. Moreover, the central C4−C4′ bond distance increases from 1.436(12) Å in **5a** to 1.47(3) Å in **8**; the latter is more in the range of a normal bond length for a C(sp^2)−C(sp^2) single bond. Around the ruthenium centers in **8**, the metal-to-ligand bond distances are slightly longer than those in complex **5a**. As a consequence of these differences, the intramolecular Ru···Ru distance increases from 10.829(2) Å in the tetracation of **5** to 11.066(3) Å in the dication of **8**.

Comproportionation Studies of Bimetallic Complexes 5a and 8. In the electrochemical study of **5a**, the fact that the two ruthenium(III) centers are not reduced simultaneously prompted us to study the possibility of preparing and isolating the mixed valence $[Ru^{II}-Ru^{III}]$ species **9**.[8] In the first experiment of this investigation, the reduced bis-ruthenium complex **8** ($[Ru^{II}-Ru^{II}]$) was dissolved in MeCN and oxidized in situ by titration with Br_2, with the solution being monitored by near-infrared (NIR) spectroscopy. Reports in the literature had suggested that a mixed valence $[Ru^{II}-Ru^{III}]$ complex would provide an absorption in the NIR region.[8b,c,9] During the titration, a broad NIR band appeared at 1875 nm and at a Br_2 to Ru_2 ratio of 1:2 it reached its maximum intensity (ϵ = 33 000 M^{-1} cm^{-1}); this intense band also exhibited a shoulder at 1650 nm. At a Br_2 to Ru_2 ratio of 1:1, both bands had completely disappeared.

In the second experiment, MeCN solutions of equimolar amounts of $[Ru^{III}-Ru^{III}]$ complex **5** (green) and $[Ru^{II}-Ru^{II}]$ complex **8** (blue) were mixed, and an instantaneous color change occurred to afford an intense purple solution. Electrochemical analysis of this purple solution showed the same cyclic voltammogram as was found for **5** and **8**. These results can be interpreted in terms of a fast comproportionation reaction of **5** with **8** to form the mixed valence $[Ru^{II}-Ru^{III}]$ species **9** (eq 1).

$$\underset{(8)}{[Ru^{II}-Ru^{II}]} + \underset{(5)}{[Ru^{III}-Ru^{III}]} \underset{}{\overset{K_c}{\rightleftharpoons}} \underset{(9)}{2\,[Ru^{II}-Ru^{III}]} \qquad (1)$$

$$K_c = \frac{[Ru^{II}-Ru^{III}]^2}{[Ru^{II}-Ru^{II}] \times [Ru^{III}-Ru^{III}]}$$

The electrochemical data can be used to calculate a comproportionation constant K_c[9a] of 900, i.e., the equilibrium depicted in eq 1 is positioned to the side of the mixed valence species **9**.

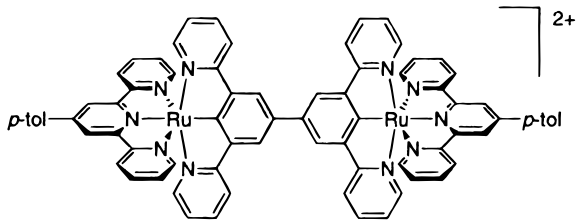

Figure 4. Schematic representation of a 4,4′-biphenylene-bridged bis-ruthenium complex **10**, obtained by a silver-mediated oxidative coupling.

Discussion

The oxidation of monometallic **3** in a nonaqueous medium by solid $Cu^{II}Cl_2$ generates the bimetallic species **5** as a result of an interesting selective C−C bond formation reaction. The mechanism of this process (outlined below) clearly involves activation of the aromatic C−H bond of the NCN ligand of **3** that is para-positioned with respect to the ruthenium−C_{ipso} bond. From the overall reaction (eq 2) one sees that the destiny of the hydrogen atoms is as protons and that the two C−H bonds and the two ruthenium(II) centers have thus provided the four electrons required for the reduction of copper(II) to copper(I).

$$2 \times [\mathbf{3}^{+}(X^{-})] + 4\,Cu^{II}Cl_2 = 1 \times [\mathbf{5}^{4+}(Cu^{I}Cl_2^{-})_4] + 2\,HX \qquad (2)$$

It should be noted that the Cu-mediated formation of bis-ruthenium(III) complex **5** is not without precedent. Fairly recently, Beley et al. prepared a bis-ruthenium(II) complex, **10** (shown schematically in Figure 4), from a reaction involving a mononuclear ruthenium(II) species in the presence of oxygen and a silver salt.[10] In this reaction an excess of Ag^{I} ions in solution is believed to provide the C−C bond formation reaction, cf. the Cu-mediated formation of **5**. Interestingly for the oxidized form of complex **3** (i.e., complex **4**), in the absence of Cu^{II} or Ag^{I} ions, or in an aqueous medium, the C−C coupling reaction leading to **5** does not take place; thus, the mechanism must involve heteronuclear organocopper or organosilver intermediates which are unstable in water. For monometallic NCN (and related ligand) complexes such as **3** with Cu^{II} ions we propose that the mechanism of this type of C−C bond formation reaction involves first the oxidation of the ruthenium(II) center to ruthenium(III) and formation of Cu^{I}. Oxidation of the ruthenium center will result in orbital rehybridization and an increased electrophilicity of the metal center. This aspect results in the activation of the para C−H bond of the (formally) NCN aryl carbanion probably via interaction with a high-energy metal-based orbital. A direct consequence of this is a facile reaction of this bond with a copper metal center. Thus, in the second step there is involvement of Cu^{+} ions, generated from the second equivalent Cu^{II} ions, to form an intermediate arylcopper species. Hereby there is formal liberation of H^{+} and a C−Cu^{I} bond is formed. We believe that such Ru(III) intermediates containing aryldiamine unit(s) in which copper is bonded at the para position are complex cluster aggregates involving combinations of Cu(I), Cu(II) and halide ions, i.e., these intermediates have a general formula $[\{Ru(NCN^{*})\}_x-(Cu)_y-Cl_z]$ ($NCN^{*} = [C_6H_2(CH_2NMe_2)_2\text{-}2,6]^{2-}$, a 1,4-phenylene bridging system). In previous studies we have shown that arylcopper aggregates react with $Cu^{II}Cl_2$ via an innersphere electron-transfer process which takes place in $(ArCu)_nClCu^{II}Cl(CuCl_2)_m$ innersphere-activated complexes and involves the formation of Ar radicals which collapse with other aryl ligands in this aggregate to form biaryls[11] or undergo with $Cu^{II}Cl_2$ entities an halide ion transfer oxidation[12] to the effect that $Cu^{I}Cl$ and ArCl are formed. The high proportion of C−C bond formation strongly suggests the intermediacy of a copper-containing aggregate ($y > 1$) rather than that of a monomeric Ru/Cu species ($y = 1$; vide supra). In view of these results, the involvement of such heteronuclear intermediates with a para C−Cu^{I} bond explains the formation of biaryl **5** and of the small amount of the 4-chloro substituted analogue of **4**, $[Ru^{III}\{C_6H_2Cl\text{-}4\text{-}(CH_2NMe_2)_2\text{-}2,6\}(terpy)]X_2$ (which was isolated as its PF_6^{-} salt **6**). The presence of **3** (para C−H) may be due to direct reprotonation of C_{para} in the innersphere activated complex. It must be noted that the overall reaction of **3** with $CuCl_2$ comprises the formation of one H^{+} and two electrons per monomeric ruthenium(II) unit (**3**). It should be noted at this point that an NCN−nickel(II) species related to ruthenium complex **3**, i.e., $[Ni^{II}Cl\{C_6H_3(CH_2NMe_2)_2\text{-}2,6\}]$, can also be oxidized using $CuCl_2$. The product of this reaction, i.e., $[Ni^{III}Cl_2\{C_6H_3(CH_2NMe_2)_2\text{-}2,6\}]$, is stable and does not react further in, for example, a C−C bond formation reaction of the para C−H bond. This implies that, in contrast to the latter NCN−nickel(III) complex, the C−H bond in the oxidized form of **3**, i.e., that of ruthenium(III) complex **4**, is involved in a high-occupied molecular orbital and this results in the activation of this bond.

Cyclic voltammetry experiments showed that the reduction of bimetallic $[Ru^{III}-Ru^{III}]$ complex **5** to $[Ru^{II}-Ru^{II}]$, **8**, is reversible, and in the cyclic voltammogram there are two reversible one-electron reduction steps, pointing to a high degree of electronic communication between the two metal centers in these bimetallic complexes.[3,4,10] In contrast, it has been shown that in complexes that have two ruthenium centers separated by an isolating bridging spacer group, the two metal centers do not feel each others presence and they are both oxidized or reduced simultaneously at one oxidation potential.[1b−d,13] The electronic communication that is present in $[Ru^{III}-Ru^{III}]$ complex **5** also exhibits itself

(8) (a) Callahan, R. W.; Keene, F. R.; Meyer, T. J.; Salmon, D. J. *J. Am. Chem. Soc.* **1977**, *99*, 1064. (b) Richardson, D. E.; Taube, H. *J. Am. Chem. Soc.* **1983**, *105*, 40. (c) Richardson, D. E.; Taube, H. *Coord. Chem. Rev.* **1984**, *60*, 107. (d) Woitelier, S.; Launay, J.-P.; Spangler, C. W. *Inorg. Chem.* **1989**, *28*, 758. (e) Collin, J.-P.; Lainé, P.; Launay, J.-P.; Sauvage, J.-P.; Sour, A. *J. Chem. Soc., Chem. Commun.* **1993**, 434.

(9) (a) Sutton, J. E.; Sutton, P. M.; Taube, H. *Inorg. Chem.* **1979**, *18*, 1017. (b) Ribou, A.-C.; Launay, J.-P.; Takahashi, K.; Nihira, T.; Tarutani, S.; Spangler, C. W. *Inorg. Chem.* **1994**, *33*, 1325.

(10) (a) Beley, M.; Louis, R.; Metz, B.; Collin, J.-P.; Sauvage, J.-P. *J. Am. Chem. Soc.* **1991**, *113*, 8521. (b) Beley, M.; Collin, J.-P.; Sauvage, J.-P. *Inorg. Chem.* **1993**, *21*, 4539.

(11) (a) van Koten, G.; James, S. L.; Jastrzebski, J. T. B. H. *Comprehensive Organometallic Chemistry II, a Review of the Literature 1982−1994, Vol. 3*; Elsevier Science Ltd.: Oxford, U.K., 1995; p 57−133. (b) van Koten, G.; Leusink, A. J.; Noltes, J. G. *J. Organomet. Chem.* **1975**, *84*, 117. (c) van Koten, G.; Noltes, J. G. *J. Organomet. Chem.* **1975**, *84*, 419.

(12) Kochi, J. K. *Organometallic Mechanisms and Catalysis*; Academic Press: New York, 1978.

Scheme 4. Schematic Representation of Some Possible Resonance Structures of the 4,4′-Biphenylene-Bridged Bis-ruthenium(III) Complex 5

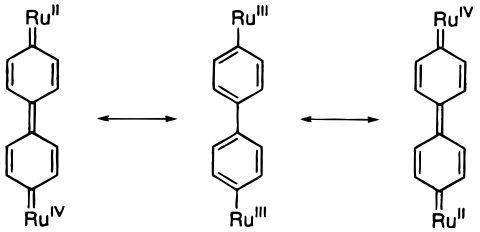

in its NMR spectroscopic properties; through electron delocalization, the two formally paramagnetic d^5 ruthenium centers combine to provide a diamagnetic species. The present study has also afforded very good evidence for the existence of a stable mixed-valence 35-electron [Ru^{III}−Ru^{II}] species **9**. This species, which is readily formed in solution either chemically or electrochemically, has a high comproportionation constant K_c of ca. 900; note that this value is lower than that calculated earlier using the same data.[7] The comproportionation constant found by Sauvage et al. for bis-ruthenium complex **10**, which also has a bis(carbon-ligating) biphenylene bridging ligand, is lower than that for complex **9**.[4b] It is worth mentioning that examples exist of mixed valence [Ru^{II}−Ru^{III}] and [Fe^{II}−Fe^{III}] species with comproportionation constants in the region from 10^5 to 10^8, though in these complexes the two metal centers in these species are not separated by a carbon-ligating bridging ligand.[14]

The electrochemical changes on going from bimetallic [Ru^{III}−Ru^{III}], **5**, to [Ru^{II}−Ru^{II}], **8**, are accompanied by characteristic structural changes which are primarily associated with the bridging ligand system. The X-ray crystal structures of the 4,4′-biphenylene bridged bis-ruthenium complex cation of **5** (see Figure 2) show through carbon−carbon bond lengths and other geometrical parameters that there is loss of aromaticity, and this can be explained with resonance bond structures based on a polyene motif (Scheme 4). This situation, in which there is a planar formally dianionic biphenylene system, is changed dramatically when bimetallic **5b** undergoes a two-electron reduction to form [Ru^{II}−Ru^{II}] complex **8**. In the reduced form (**8**), both phenylene rings of the bridging ligand now show typical bond parameters for nondistorted aromatic ring systems, and the dihedral angle of 36° between the two individual rings points to an undistorted (bis-ruthenium substituted) biphenyl molecule, in which there is unlikely to be metal−metal communication.

Bis-ruthenium complex **10**, reported earlier,[10] is structurally related to the new bis-ruthenium complexes **5a** and **8** in that it also contains a bridging 4,4′-biphenylene unit, but this is substituted with 2-pyridyl groups rather than the CH_2NMe_2 substituents in our system. In the case of complex **10**, the X-ray crystal structure determination was only performed on the reduced species, i.e., [Ru^{II}−Ru^{II}]. For comparative purposes, some selected geometric data for complex **10** are also shown in Table 3.

What can be clearly seen from Table 3 is that the Ru−C_{aryl} and Ru−N bond distances of bimetallic complexes **8** and **10** (both [Ru^{II}−Ru^{II}]) are in the same range. The C4−C4′ bond of complex **10** has a normal bond length for a C(sp^2)−C(sp^2) single bond, i.e., similar nondistorted aromatic rings are found both in the solid-state structure of 4,4′-biphenylene-bridged bis-ruthenium(II) complexes **8** and **10**; in the latter the torsion angle around the central C−C bond amounts to 22.2(7)°,[10] compared to 36° for complex **8**. In complex **10**, as also encountered in the solid-state structure of **8**, the bond distances and angles involving the carbon atoms of the two bridging aromatic rings are normal. The intramolecular Ru···Ru distances in [Ru^{II}−Ru^{II}] species **8** and **10** are also similar (11.066(3) vs 11.009(2) Å, respectively).

It is apparent that for [Ru^{II}−Ru^{II}] biphenylene systems, such as **8** and **10**, a nonplanar bridging system is preferred and this is the result of both the electronic situation and steric interactions (among protons at the 3, 3′, 5, and 5′-positions). This situation can be compared with that of neutral biphenyl, for which the preferred low-energy gas-phase structure is one where the two aryl rings are twisted with respect to each other.[15a,b] However, crystal packing effects (π-stacking) results in the solid-state structure of biphenyl being planar.[15c] In contrast, in complex **5**, the solid-state planarity of the central biphenylene system is solely the result of what must be a very favored electronic situation that overcomes steric interactions without assistance from π-stacking effects with other biphenylene systems; the steric bulk of the ligands comprising the ruthenium coordination sphere results in a large intermolecular phenylene to phenylene ring separation of more than 7 Å in the crystal lattice. In our earlier description of the crystal structure of complex **5**,[7a] we showed a figure which showed the complex tetracation without the $CuCl_2^-$ anions and solvent molecules that are present in the crystal lattice. However, examination of the lattice shows that two $CuCl_2^-$ anions are in fact closely associated with the tetracation, and as shown by the space-filling model in Figure 5, it can be seen that these two linear anions occupy the "free" space above and below the biphenylene bridge at a distance of ca. 3.5 Å. We have not examined this aspect further, but this interaction does provide an interesting indication that bimetallic systems with biphenylene bridges may have some potential to act as anion hosts in molecular recognition systems. It should be noted that this type of packing is not found in the solid-state structure of complex **8**.

The structural results reported above for bimetallic systems such as **5**, and **8**−**10** show that the 4,4′-biphenylene bridging ligand has the potential to be a most useful building block in multimetallic systems where changes in metal oxidation state result in a switching of geometric (and electronic) properties. Further aspects of controlled multimetallic architecture

(13) (a) Constable, E. C.; Harverson, P.; Oberholzer, M. *Chem. Commun.* **1996**, 1821. (b) Armspach, D.; Cattalini, M.; Constable, E. C.; Housecroft, C. E.; Philips, D. *Chem. Commun.* **1996**, 1823.

(14) (a) Hatzidimitriou, A.; Gourdon, A.; Devillers, J.; Launay, J.-P.; Mena, E.; Emouyal, E. *Inorg. Chem.* **1996**, *35*, 2212. (b) Ward, M. D. *Inorg. Chem.* **1996**, *35*, 1712. (c) Coat, F.; Lapinte, C. *Organometallics* **1996**, *15*, 477.

(15) (a) Merkel, E.; Wiegand, Ch. *Z. Naturforsch.* **1948**, *3b*, 93. (b) Bastiansen, O. *Acta Chem. Scand.* **1949**, *3*, 348. (c) Dhar, J. *Ind. J. Phys.* **1932**, *7*, 43.

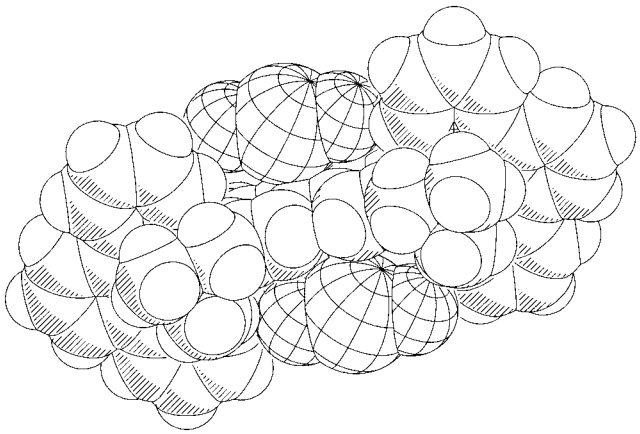

Figure 5. PLUTON space-filling structure of the complex tetracation $[(Ru^{III})_2(4,4'\text{-}\{C_6H_2(CH_2NMe_2)_2\text{-}2,6\}_2)(terpy)_2]^{4+}$ of **5a**, together with two of the $CuCl_2^-$ anions that pack above and below the biphenylene bridge.

relevant to catalysis and new materials are the subject of active research in our laboratory.[16]

The interesting differences in structural and optical properties of bis-ruthenium complexes **5** and **8** offer the potential of using these species to construct a molecular switch. The requirements for a molecular switch[17] are (i) bistability (i.e., occurrence of two stable forms of a molecule), (ii) fast and selective interconversion, (iii) nondestructive sensitive detection of the two forms, and (iv) efficient switching. Bis-ruthenium complex **5** and its reduced form **8** satisfy these requirements, since both these species have high stability at elevated temperatures (i.e., high decomposition temperatures) and can be selectively and quantitatively interconverted electrochemically. Furthermore, UV/vis techniques can be applied for detection of the two forms.

Conclusion

In this paper we have shown that dinuclear species of the type [(terpy)Ru(BL)Ru(terpy)] (BL = bridging ligand) are interesting materials whose geometrical and spectroscopic properties can be switched both chemically and electrochemically. The change from $[Ru^{III}-Ru^{III}]$, in which spin−spin coupling through intermetallic contact occurs, to $[Ru^{II}-Ru^{II}]$ is accompanied by both structural (i.e., planar to nonplanar) and dramatic spectroscopic (i.e., color) changes, making these species potential candidates for molecular switches. Furthermore, the linearity of these bimetallic complexes in combination with modification of the terpyridine ligand offers an entrance into organometallic polymers, molecular devices, and optoelectronic materials, in which an electric current causes both a structural and a spectroscopic change. In this context, the air-stability and water-solubility of the dinuclear complexes **5** and **8** are additional advantageous characteristics of these species.

Experimental Section

General Comments. All organometallic syntheses were performed under a dry dinitrogen atmosphere, using standard Schlenk techniques. The solvents Et_2O, THF, hexane, and benzene were dried with sodium/benzophenone and freshly distilled prior to use. ^1H and ^{13}C NMR measurements were performed at 298 K with a Bruker AC200 or AC300 spectrometer, with chemical shifts referenced to Me_4Si. Elemental analyses were carried out by Dornis und Kolbe, Mikroanalytisches Laboratorium, Mülheim, Germany. The NCN ruthenium(II) complex $[Ru^{II}\{C_6H_3(NMe_2)_2\text{-}2,6\}(terpy)]^+(Cl^-)$, **3**, was prepared according to a literature procedure.[6a]

Synthesis of $[(Ru^{III})_2(4,4'\text{-}\{C_6H_2(NMe_2)_2\text{-}2,6\}_2)(terpy)_2](PF_6)_4$ (5b). To a solution of the NCN ruthenium(II) complex **3** (0.20 g, 0.35 mmol) in MeOH (6 mL) was added solid $CuCl_2$ (0.13 g, 1.0 mmol) in one portion, and the reaction mixture was stirred at room temperature for 17 h to give a copper-colored solid and a deep red solution. To characterize all of the products of this reaction, the solvent was removed in vacuo and the residue was dissolved in MeCN (3 mL) to give a green solution which was subjected to column chromatographic separation over a silica column. Elution with a mixture of MeCN/H_2O/saturated aquous KNO_3 (6/3/1 in volume) afforded a purple-blue fraction (starting material, complex **3**) followed by a red one (the 4-chloro-substituted NCN ruthenium(III) complex **6**). The column was then eluted with a 5/5/1 mixture of the previous solvents to afford a major green fraction, containing the bimetallic C−C coupled product **5**. The following workup was then applied to all three fractions: the solutions were concentrated in vacuo to a third of the volume, an excess of aquous NH_4PF_6 was added, and the precipitate that formed was filtered off and washed with H_2O and Et_2O. The red fraction gave a deep red solid, identified as **6** (0.04 g, ±9%) after reduction with $N_2H_4{\cdot}H_2O$ to **7**. The green band gave a bronze-colored solid after evaporation. The latter was dissolved in MeCN (2−3 mL), and CH_2Cl_2 (5 mL) and toluene (5−8 mL) were added to give the red microcrystalline complex **5b** (yield 0.28 g (60%), mp > 200 °C). Crystals of $[(Ru^{III})_2(4,4'\text{-}\{C_6H_2(NMe_2)_2\text{-}2,6\}_2)(terpy)_2](CuCl_2)_4$, **5a**, that were suitable for X-ray analysis, were obtained by layering a MeOH/CH_2Cl_2 solution of the reaction mixture of **3** and $CuCl_2$ (after 17 h) with Et_2O.

5b. ^1H NMR (200 MHz, CD_3CN): δ 8.93 (d, 4 H, $^3J_{HH}$ = 8.0 Hz, ArH), 8.78−8.73 (m, 8 H, ArH), 8.60 (t, 2 H, $^3J_{HH}$ = 8.1 Hz, ArH), 8.25−8.18 (m, 8 H, ArH), 7.65 (br s, 4 H, ArH), 4.00 (br s, 8 H, NCH_2), 1.27 (s, 24 H, NMe_2). Anal. Calcd for $[C_{55}H_{60}Cl_2F_{24}N_{10}P_4Ru_2]$: C, 38.54; H, 3.53; N, 8.17. Found: C, 38.88; H, 3.76; N, 7.98%.

7. ^1H NMR (200 MHz, CD_3CN): δ 8.60 (d, 2 H, $^3J_{HH}$ = 8.0 Hz, ArH), 8.45 (d, 2 H, $^3J_{HH}$ = 7.7 Hz, ArH), 8.18 (d, 2 H, $^3J_{HH}$ = 5.6 Hz, ArH), 7.98 (t, 1 H, $^3J_{HH}$ = 8.0 Hz, ArH), 7.91 (td, 2 H, $^3J_{HH}$ = 8.1 Hz, $^4J_{HH}$ = 1.5 Hz, ArH), 7.43 (m, 2 H, ArH), 7.24 (s, 2 H, ArH), 3.60 (s, 4 H, NCH_2), 1.18 (s, 12 H, NMe_2). ^{13}C NMR (50 MHz, CD_3CN): δ 200.2 (*C*-Ru), 161.3, 155.8, 153.8, 145.3, 135.6, 129.9, 127.9, 124.1, 122.6, 121.0, 118.3 (Ar), 75.1 (NCH_2), 52.2 (NMe_2). FAB-MS (nitrobenzyl alcohol matrix) *m/z* ($\mathbf{6}^{2+}$): 705.0 (705.0 calcd for **6**).

Synthesis of $[(Ru^{II})_2(4,4'\text{-}\{C_6H_2(NMe_2)_2\text{-}2,6\}_2)(terpy)_2](PF_6)_2$ (8). To a deep green solution of bis-ruthenium(III) complex **5b** (100 mg, 61 μmol) in MeCN (10 mL) was added excess of $N_2H_4{\cdot}H_2O$ (0.2 mL), and the reaction mixture, which rapidly changed color to blue, was stirred for 1 h at room temperature. After concentration in vacuo to ∼2 mL, an aqueous solution of NH_4PF_6 was added, and this resulted in precipitation of a blue solid. Recrystallization of this solid from a MeCN/H_2O mixture afforded **8** as a blue microcrystalline

(16) (a) Knapen, J. W. J.; van der Made, A. W.; de Wilde, J. C.; van Leeuwen, P. W. N. M.; Wijkens, P.; Grove, D. M.; van Koten, G. *Nature* **1994**, *372*, 659. (b) James, S. L.; Veldman, N.; Spek, A. L.; van Koten, G. *Chem. Commun.* **1996**, 253. (c) James, S. L.; Verspui, G.; Spek, A. L.; van Koten, G. *Chem. Commun.* **1996**, 1309. (d) Davies, P. J.; Veldman, N.; Grove, D. M.; Spek, A. L.; Lutz, B. T. G.; van Koten, G. *Angew. Chem., Int. Ed. Engl.* **1996**, *35*, 1959. (e) Steenwinkel, P.; James, S. L.; Grove, D. M.; Kooijman, H.; Spek, A. L.; van Koten, G. *Organometallics* **1997**, *16*, 513.

(17) For a general review on molecular switches, see: Feringa, B. L.; de Jager, W. F.; de Lange, B. L. *Tetrahedron* **1993**, *49*, 8267.

solid (yield 77 mg (94%), mp 187−190 °C). ^{1}H NMR (200 MHz, CD_3CN): δ 8.65 (d, 4 H, $^3J_{HH}$ = 8.0 Hz, ArH), 8.50 (d, 4 H $^3J_{HH}$ = 7.9 Hz, ArH), 8.30 (d, 4 H, $^3J_{HH}$ = 5.0 Hz, ArH), 8.01 (t, 2 H, $^3J_{HH}$ = 8.0 Hz, ArH), 8.01 (t, 2 H, $^3J_{HH}$ = 8.0 Hz, ArH), 7.95 (td, 4 H, $^3J_{HH}$ = 7.8 Hz, $^4J_{HH}$ = 1.4 Hz, ArH), 7.68 (s, 4 H, ArH), 7.49 (td, 4 H, $^3J_{HH}$ = 6.5 Hz, $^4J_{HH}$ = 1.3 Hz, ArH), 3.75 (br s, 8 H, NCH_2), 1.25 (s, 24 H, NMe_2). ^{13}C NMR (50 MHz, CD_3CN): δ 199.8 (*C*-Ru), 161.4, 155.8, 153.7, 144.2, 137.3, 135.3, 129.3, 127.8, 124.1, 122.6, 119.4, 118.4 (Ar), 75.8 (NCH_2), 52.2 (NMe_2). FAB-MS (nitrobenzyl alcohol matrix) *m/z* (**8**): 1195.0 (1195 calcd for **8**).

X-ray Structure Determination of Complex 8. X-ray data were collected with an ENRAF−NONIUS CAD4-diffractometer on a rotating anode generator at 150 K. The crystal used for data collection was taken from the mother liquor and mounted with the inert oil technique. All crystals attempted for data collection turned out to be weak reflectors with structured reflection profiles. Although of limited quality, the data set obtained was considered of sufficient quality for the purpose of this study. The structure was solved by automated heavy atom techniques (DIRDIF-96)[18] and refined on F^2 using SHELXL-97.[19] Data were corrected for absorption using the DELABS procedure as implemented in PLATON.[20] All non-hydrogen atoms were refined with anisotropic displacement parameters. Hydrogen atoms were taken into account at calculated positions riding on their carrier atoms. The structure contains at least five disordered water molecules of crystallization. No hydrogen atoms could be located on them.

Acknowledgment. This work was supported in part (P.S., A.L.S., N.V.) by The Netherlands Foundation for Chemical Research (SON) with financial aid from The Netherlands Organization for Scientific Research (NWO). We also thank the EU COST-D4 Program on "New Molecular Systems with Unconventional Electrical, Optical and Magnetic Properties" for financial support and Prof. J.-P. Sauvage, Dr. J.-P. Collin, and Dr. J.-P. Sutter for collaboration.

Supporting Information Available: Further details of the structure determination of **8**, including atomic coordinates, bond lengths and angles, and thermal parameters (21 pages). Ordering information is given on any current masthead page.

OM980495P

(18) Beurskens, P. T.; Admiraal, G.; Beurskens, G.; Bosman, W. P.; García-Granda, S.; Gould, R. O.; Smits, J. M. M.; Smykalla, C. *The DIRDIF96 Program System*; Technical Report of the Crystallography Laboratory, 1996, Universuty of Nijmegen, The Netherlands.

(19) Sheldrick, G. M. *SHELXL97 Program for Crystal Structure Refinement*; University of Göttingen, Germany, 1997.

(20) Spek, A. L. *Acta Crystallogr.* **1990**, *A46*, C34.