Check for updates

Article

Organizational Research Methods
2020, Vol. 23(4) 688-716
© The Author(s) 2019
Article reuse guidelines:
sagepub.com/journals-permissions
DOI: 10.1177/1094428119847280
journals.sagepub.com/home/orm
SAGE

From Data to Causes II: Comparing Approaches to Panel Data Analysis

Michael J. Zyphur[1], Manuel C. Voelkle[2,3], Louis Tay[4], Paul D. Allison[5], Kristopher J. Preacher[6], Zhen Zhang[7], Ellen L. Hamaker[8], Ali Shamsollahi[9], Dean C. Pierides[10], Peter Koval[11], and Ed Diener[12,13]

Abstract

This article compares a general cross-lagged model (GCLM) to other panel data methods based on their coherence with a causal logic and pragmatic concerns regarding modeled dynamics and hypothesis testing. We examine three "static" models that do not incorporate temporal dynamics: random- and fixed-effects models that estimate contemporaneous relationships; and latent curve models. We then describe "dynamic" models that incorporate temporal dynamics in the form of lagged effects: cross-lagged models estimated in a structural equation model (SEM) or multilevel model (MLM) framework; Arellano-Bond dynamic panel data methods; and autoregressive latent trajectory models. We describe the implications of overlooking temporal dynamics in static models and show how even popular cross-lagged models fail to control for stable factors over time. We also show that Arellano-Bond and autoregressive latent trajectory models have various shortcomings. By contrasting these approaches, we clarify the benefits and drawbacks of common methods for modeling panel data, including the GCLM approach we propose. We conclude with a discussion of issues regarding causal inference, including difficulties in separating different types of time-invariant and time-varying effects over time.

[1]Department of Management & Marketing, Business & Economics, University of Melbourne, Melbourne, Australia
[2]Institut für Psychologie, Humboldt University Berlin, Berlin, Germany
[3]Max Planck Institute for Human Development, Berlin, Germany
[4]Department of Psychology, Purdue University, West Lafayette, IN, USA
[5]Department of Sociology, University of Pennsylvania, Philadelphia, PA, USA
[6]Department of Psychology & Human Development, Vanderbilt University, Nashville, TN, USA
[7]Department of Management, W. P. Carey School of Business, Arizona State University, Tempe, AZ, USA
[8]Department of Methods and Statistics, Utrecht University, Utrecht, Netherlands
[9]ESSEC Business School, Cergy-Pontoise, France
[10]Department of Management Work and Organisation, University of Stirling, Stirling, USA
[11]Department of Psychology, University of Melbourne, Melbourne, Australia
[12]Department of Psychology, University of Utah, Salt Lake City, UT, USA
[13]Department of Psychology, University of Virginia, Charlottesville, VA, USA

Corresponding Author:
Michael J. Zyphur, Department of Management and Marketing, Parkville, VIC 3010, Australia.
Email: mzyphur@unimelb.edu.au

Keywords
panel data model, causal inference, cross-lagged model, Granger causality, structural equation model, multilevel model, latent curve model, latent growth model, Arellano-Bond methods

Many methods exist for analyzing panel data (e.g., Arellano, 2003; Bollen & Curran, 2006; Box, Jenkins, & Reinsel, 2008). Yet, only some capitalize on the structure of panel data to offer a clear path to causal inferences. To justify such inferences, a theory of causality must be mapped onto a statistical model while addressing potential threats to causal inference (Granger, 1969, 1980). However, this is rarely done explicitly in most applications of panel data analysis.

We seek to promote a better understanding of causal modeling with panel data by showing the strengths and weaknesses of different panel data methods. For this, we use a coherence-based approach for comparing methods, while also being sensitive to their more pragmatic features. In terms of coherence, organization scholars note that it is crucial for developing and justifying theories by showing their link to existing logics and empirical findings (Locke & Golden-Biddle, 1997; Shepherd & Sutcliffe, 2011). In other words, a theory is justified if it fits with preexisting "background systems" or "webs of belief" in a community of researchers (see philosophical thought by Davidson, 1986; Lehrer, 2000; Quine & Ullian, 1970).

This approach is often implicitly used to justify methods, such as by arguing for their coherence with a psychometric logic (Bagozzi & Edwards, 1998; Edwards, 2011). We formally take this approach to evaluate panel data models based on their coherence with a typical view of causality, including (a) a cause→effect temporal order, (b) possible bidirectional effects among variables, and (c) controls for potential confounders. Yet, we also recognize that models have a pragmatic character in terms of the range of dynamic processes they can capture, the richness of information from hypothesis tests, and their ease of use. We use these criteria rather than, for example, Monte Carlo simulations because the latter start by assuming that one model is true—which is not knowable in practice—to show the foregone conclusion that others are problematic.

In what follows, we begin by describing the general cross-lagged model (GCLM) from our first article, treating its relation to causal inference and the importance of accounting for unit effects (i.e., stable factors) and temporal dynamics (i.e., the dependence of the future on the past; Baltagi, 2013b; Hsiao, 2014). We also note the range of system dynamics and hypothesis tests associated with a GCLM, including short-run and long-run effects. Then, we contrast the GCLM against alternative panel data models, many of which are very common in organization research.

Throughout, we distinguish static and dynamic models, where only dynamic models treat dependence of the future on the past with lagged effects. We first present static models: random-effects models; fixed-effects models (i.e., group-mean centered or within-group approaches); and latent curve models. We then treat dynamic models: cross-lagged models as structural equation models (SEM) or multilevel models (MLM), including with group-mean centering; econometric Arellano-Bond dynamic panel data models; and autoregressive latent trajectory models. By evaluating these methods based on a logic of causality and pragmatic concerns, we show how: static models make causal inference problematic by excluding lagged effects; unit effects are left uncontrolled in cross-lagged models and group-mean centering produces dynamic panel bias; and Arellano-Bond and autoregressive latent trajectory methods have various shortcomings. Online materials available at https://doi.org/10.26188/5c9ec7295fefd offer Mplus and Stata output, and the included Online Appendix A includes comparisons using data from Van Iddekinge et al. (2009) and Meier and Spector (2013), as in our first article.

We conclude with recommendations for how to match panel data models to theory and the context of research, as well as some of the limitations for causal inference associated with

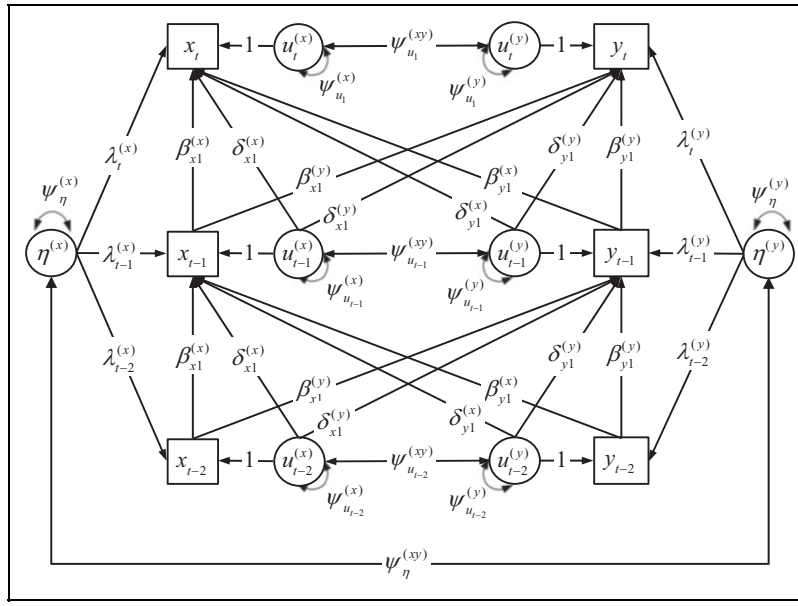

Figure 1. A Full GCLM With AR(1)MA(1)CL(1)CLMA(1) Effects.

controlling for confounds in panel data models. We also note that there are other methods for analyzing panel data such as latent change score models (i.e., a model in differences; McArdle, 2001, 2009), but these can be seen as special cases of a GCLM (e.g., Voelkle & Oud, 2015).

The General Cross-Lagged Model (GCLM)

In our first article, we started with a cross-lagged model for a unit i at an occasion t, for N units and T occasions, measured for two variables x_{it} and y_{it}. Parenthetic superscripts (x) and (y) indicate the dependent variable of the corresponding equation, and subscripts x and y indicate the predictor with which a coefficient may be associated. An h indicates a lag or lead, such as y_{it-h} for y at h occasions before t. With this, a familiar cross-lagged model is as follows:

$$x_{it} = \alpha_t^{(x)} + \beta_{x1}^{(x)} x_{it-1} + \beta_{y1}^{(x)} y_{it-1} + u_{it}^{(x)} \tag{0a}$$
$$y_{it} = \alpha_t^{(y)} + \beta_{y1}^{(y)} y_{it-1} + \beta_{x1}^{(y)} x_{it-1} + u_{it}^{(y)} \tag{0b}$$

wherein α_t is an occasion effect capturing factors that affect all units at a time t; $\beta_{x1}^{(x)}$ and $\beta_{y1}^{(y)}$ are autoregressive (AR) terms, which can be thought of as the dependence of the future on the past (of the form $\beta_{yh}^{(y)}$, wherein h is a lag); $\beta_{y1}^{(x)}$ and $\beta_{x1}^{(y)}$ are cross-lagged (CL) terms, indicating short-run effects (of the form $\beta_{xh}^{(y)}$, wherein h is the lag); and u_{it} is an impulse capturing random factors with variances $\psi_{u_t}^{(x)}$ and $\psi_{u_t}^{(y)}$, and a covariance or "co-movement" $\psi_{u_t}^{(xy)}$.

Here, AR and CL terms can be seen as indirect effects of past impulses on the future (seen by path tracing from an early u_{it}). Direct dependence on impulses can also be modeled, as can time-varying effects of stable factors or "unit effects" to formulate a GCLM (see Figure 1):

$$x_{it} = \alpha_t^{(x)} + \lambda_t^{(x)} \eta_i^{(x)} + \beta_{x1}^{(x)} x_{it-1} + \delta_{x1}^{(x)} u_{it-1}^{(x)} + \beta_{y1}^{(x)} y_{it-1} + \delta_{y1}^{(x)} u_{it-1}^{(y)} + u_{it}^{(x)} \tag{1}$$
$$y_{it} = \alpha_t^{(y)} + \lambda_t^{(y)} \eta_i^{(y)} + \beta_{y1}^{(y)} y_{it-1} + \delta_{y1}^{(y)} u_{it-1}^{(y)} + \beta_{x1}^{(y)} x_{it-1} + \delta_{x1}^{(y)} u_{it-1}^{(x)} + u_{it}^{(y)} \tag{2}$$

wherein a unit effect η_i captures stable factors over time (e.g., individual personality or national culture), with variances $\psi_\eta^{(x)}$ and $\psi_\eta^{(y)}$, and covariance $\psi_\eta^{(xy)}$; λ_t is a time-varying unit effect at each occasion; and direct dependence of the future on past impulses exists as moving average (MA) terms $\delta_{x1}^{(x)}$ and $\delta_{y1}^{(y)}$, and cross-lagged moving average (CLMA) terms $\delta_{y1}^{(x)}$ and $\delta_{x1}^{(y)}$.

The GCLM strongly coheres with the logic of causality noted above: (a) causes precede effects via lagged predictors; (b) bidirectional effects are allowed by all variables predicting each other; (c) potential confounds are controlled as occasion effects and unit effects that can induce aggregate and unit-specific trends, respectively, while AR terms hold the past constant to assess predictors' unique effects. As for the pragmatic nature of a GCLM: (a) MA and CLMA terms enhance the range of dynamic processes it can model, with MA and CLMA terms that allow large temporary effects (e.g., small positive AR/CL effects and large positive MA/CLMA effects) or small persistent effects (e.g., large positive AR/CL effects and moderate negative MA/CLMA effects); (b) hypothesis tests offer rich information as short-run effects that take the form of CL + CLMA terms (e.g., $\beta_{y1}^{(x)} + \delta_{y1}^{(x)}$), whereas long-run effects can be estimated as impulse responses to show the effect of a random impulse on the future of each variable—a set of indirect effects; and (c) the GCLM is easily estimated with common SEM software.

To give some context to these assertions, we offer an abridged description of the panel data and results from our first article. For this, it is important to keep in mind that estimating a GCLM requires choosing some number of unit effects (typically one η_i for each process variable) and a lag order for each term: p lags in an AR(p) model; q lags in an MA(q) model; c lags in an CL(c) model; and l lags in an CLMA(l) model. To choose a model, substantive and statistical checking is used, favoring parsimonious models based on theory and contextual knowledge (Armstrong, Green, & Graefe, 2015; Green & Armstrong, 2015). Our first article illustrated this by reanalyzing income x_{it} and subjective well-being (SWB) y_{it} for $N = 135$ countries and $T = 6$ years (Diener, Tay, & Oishi, 2013). After model checking, we chose an AR(1)MA(2)CL(1)CLMA(1) model for income x_{it} and an AR(1)MA(1)CL(1)CLMA(1) model for SWB y_{it} (descriptive statistics are in our first article; results are in Table 1 under Model 1).

In terms of the dynamics implied by this model, income is highly persistent with an AR $\beta_{x1}^{(x)} = .958$, but a negative MA $\delta_{x.}^{(x)} = -.271$ reduces short-run persistence to $\beta_{x1}^{(x)} + \delta_{x.}^{(x)} = .686$. On the other hand, SWB has a smaller AR $\beta_{y1}^{(y)} = .390$, but a positive MA $\delta_{y1}^{(y)} = .191$ increases short-run persistence to $\beta_{y1}^{(y)} + \delta_{y1}^{(y)} = .581$. Also, estimated causal effects are not consistent with past findings that show significant positive effects (e.g., Diener et al., 2013). In a GCLM, the short-run income→SWB effect is $\beta_{x1}^{(y)} + \delta_{x1}^{(y)} = .139$, with long-run impulse responses showing this positive effect is highly persistent (due to income's large AR term), but CIs include zero. On the other hand, the short-run SWB→income effect is a negative $\beta_{y1}^{(x)} + \delta_{y1}^{(x)} = -.023$, and long-run impulse responses show this negative effect is highly persistent (due to income's large AR term), with CIs including zero. The point is that not only does the GCLM cohere with a logic of causality, but complex dynamics are accommodated while providing rich descriptions of long-run effects via impulse responses, all easily estimable in SEM software (in this case Mplus).

Alternative Approaches to Panel Data Analysis

Different researchers often use different methods for panel data analysis (contrast Baltagi, 2013b; Pitariu & Ployhart, 2010; Raudenbush, 2001). Yet, only some of these clearly map a causal logic to model parameters. To treat the coherence of different methods with a logic of causality and their pragmatic features, we treat common static and dynamic models. There are many variations on these models, but we offer typical specifications and descriptions. For clarity, in our text and figures u refers to a random impulse whereas we use ε as a residual that, as we note, may be conflated with unmodeled lagged effects, occasion effects, and/or unit effects.

Table 1. Results for Dynamic Models.

	Model									
Parameter	1	2.1	2.2	2.3	2.4	3.1	3.2	3.3	4.1	4.2
SWB→SWB AR/MA Terms $\beta_{y1}^{(y)}$ and $\delta_{y1}^{(y)}$										
$\beta_{y1}^{(y)}$	.390	.877*	.856*	.031	.674*	.66*	.441*	.62*	.451*	.597*
$\delta_{y1}^{(y)}$	.191	—	—	—	—	—	—	—	—	—
$\beta_{y1}^{(y)} + \delta_{y1}^{(y)}$	.580*	.877*	.856*	.031	.674*	.66*	.441*	.62*	.451*	.597*
Income→Income AR/MA Terms $\beta_{x1}^{(x)}$ and $\delta_{x1}^{(x)}$										
$\beta_{x1}^{(x)}$	.958*	.952*	.944*	.079	.583*	.982*	.458	.59*	.083	.561*
$\delta_{x1}^{(x)}$	–.326	—	—	—	—	—	—	—	—	—
$\delta_{x2}^{(x)}$	.055	—	—	—	—	—	—	—	—	—
$\beta_{x1}^{(x)} + \delta_{x.}^{(x)}$	.686*	.952*	.944*	.079	.583*	.982*	.458	.59*	.083*	.561*
Income→SWB CL/CLMA Terms $\beta_{x1}^{(y)}$ and $\delta_{x1}^{(y)}$										
$\beta_{x1}^{(y)}$	.131	.108*	.122*	.275*	.014	.184	.063	.076	.069	.318*
$\delta_{x1}^{(y)}$	.009	—	—	—	—	—	—	—	—	—
$\beta_{x1}^{(y)} + \delta_{x1}^{(y)}$	.139	.108*	.122*	.275*	.014	.184	.063	.076	.069	.318*
SWB→Income CL/CLMA Terms $\beta_{y1}^{(x)}$ and $\delta_{y1}^{(x)}$										
$\beta_{y1}^{(x)}$	–.103	.027*	.036*	.024	.004	.011	.138	.053	.019	.046
$\delta_{y1}^{(x)}$	.080	—	—	—	—	—	—	—	—	—
$\beta_{y1}^{(x)} + \delta_{y1}^{(x)}$	–.023	.027*	.036*	.024	.004	.011	.138	.053	.019	.046

Note: Columns are named after the models described in the text as follows: Model 1 is our full AR(1)MA(2)CL(1)CLMA(1) GCLM; 2.1 is a cross-lagged SEM; 2.2 is a cross-lagged MLM; 2.3 is a group-mean or within-group centered cross-lagged model; 2.4 is a cross-lagged SEM with time-varying unit effects; 3.1 is a "system-GMM" model in differences and levels; 3.2 is a difference-GMM; 3.3 is an SEM version of a latent fixed-effects model 4.1 is an ALT with a linear trend to represent unit effects; 4.2 is an ALT with a single time-varying unit effect. ALT = autoregressive latent trajectory; AR = autoregressive; CL = cross-lagged; CLMA = cross-lagged moving average; GCLM = general cross-lagged model; GMM = generalized methods of moments; MA = moving average; MLM = multilevel model; SEM = structural equation model; SWB = subjective well-being.
* $p < .05$.

Static Models

We define static models as those that do not specify dependence of the future on the past (i.e., excluding lagged effects; Hsiao, 2014). Thus, by "static" we are referring to the nature of a statistical model rather than the data used for estimation. We begin with two common MLMs in the form of random- and fixed-effects specifications, and then discuss latent curve models.

Random-effects MLM. The MLM has gained substantial prominence in organizational science over the past 30 years (e.g., Hofmann, 1997). This approach recognizes that observations can be hierarchically structured, in our case $T = 6$ observations of SWB and income "nested" in $N = 135$ countries. With this clustering, an MLM estimates relationships while modeling

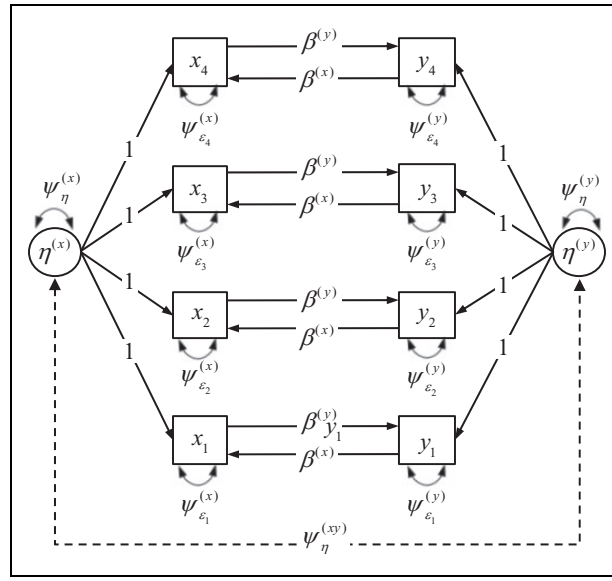

Figure 2. Random-Effects Model When Latent Unit Effect Covariance Restricted to Zero (Dashed Line), but Fixed-Effects Model Accounting for Unit Effects When Latent Covariance Estimated.

variation in outcomes due to lower-level factors across N and T versus higher-level factors across N. For example, Bloom (1999) predicted baseball player performance at multiple seasons with variables such as contemporaneous performance opportunity; Gulati (1995) predicted firm alliances at multiple years with contemporaneous measures of firm interdependence. Thus, inherent in this approach is treating the data as if they were a collection of T cross-sections (see Figure 2).

With SEM notation, we show this in an MLM that controls for occasion effects:

$$x_{it} = \alpha_t^{(x)} + \eta_i^{(x)} + \beta_{y0}^{(x)} y_{it} + \varepsilon_{it}^{(x)} \tag{3}$$

$$y_{it} = \alpha_t^{(y)} + \eta_i^{(y)} + \beta_{x0}^{(y)} x_{it} + \varepsilon_{it}^{(y)} \tag{4}$$

where a subscript "0" on β indicates a contemporaneous relationship, η_i is a "random intercept" at "Level-2" or a between-unit term, and we treat ε_{it} as a "Level-1" or within-unit residual.

As Figure 2 shows, each η_i is a latent variable meant to reflect stable unit-specific factors, but with one key assumption: each unit effect η_i is assumed to be uncorrelated with predictors. This is one potential source of the "random" designation in a "random-effects" model, where η_i is specified as uncorrelated with other variables, such as by specifying $\psi_\eta^{(xy)} = 0$ (see the dashed line in Figure 2)—this is often why the term "random effects" is used for such models.

This approach causes concerns regarding causal inference and the pragmatic nature of the model. The first causal concern relates to the temporal nature of the effects. Without modeling temporal priority among the variables, effects like $\beta_{y0}^{(x)}$ and $\beta_{x0}^{(y)}$ require either mapping causality onto a logic of instantaneousness or researchers must accept that Eqs. 3 and 4 are misspecified by omitting lagged effects. If instantaneousness is accepted, it may be difficult to infer that x_{it} and y_{it} measure different things (or that one can be predictive of the other) because they are being modeled as immediately changing together (Gollob & Reichardt, 1987).

The next concern relates to possible bidirectional effects and controlling for confounds. Because $\beta_{y0}^{(x)}$ and $\beta_{x0}^{(y)}$ cannot both be estimated, estimating $\beta_{y0}^{(x)}$ or $\beta_{x0}^{(y)}$ requires assuming that either y or x is the cause of the other, so all x-y covariance (after accounting for α_t and η_i) is attributed to a causal effect of y on x or vice versa (as in Bloom, 1999; Gulati, 1995). This amounts to assuming that none of the following exist: a reversed causal direction; x-y feedback; and common causes of x and y due to stable or time-varying factors, meaning no covariance due to unit effects or impulse co-movements, respectively—all of which are possible (Deaton, 2003).

Consider if $\beta_{y0}^{(x)}$ and $\beta_{x0}^{(y)}$ were separately estimated, which we do with two SEMs while imposing $\psi_{\eta}^{(xy)} = 0$. This results in an income→SWB term for Eq. 3: $\beta_{y0}^{(x)} = .162$, $t = 4.985$, $p < .001$; and an SWB→income term for Eq. 4: $\beta_{x0}^{(y)} = .799$, $t = 14.259$, $p < .001$. These cannot be decomposed into $x \rightarrow y$ and $y \rightarrow x$ causality, x-y feedback, or common causes (Geweke, 1982; Granger, 1980; Pierce & Haugh, 1977). One implication is that contemporaneous co-movements and unit effects are not controlled. This can be seen by comparing unit effect variances before and after prediction, showing $\psi_{\eta}^{(x)} = .806$ and $\psi_{\eta}^{(y)} = 1.096$ when the variable is a predictor, but $\psi_{\eta}^{(x)} = .582$ and $\psi_{\eta}^{(y)} = .369$ when the variable is an outcome, implying that $\beta_{y0}^{(x)}$ and $\beta_{x0}^{(y)}$ partly reflect unit effects due to stable factors, such as culture or various institutional characteristics. In other words, unit effects are confounded with the contemporaneous effects among the variables.

In terms of the pragmatic features of the model, although they are easy to estimate, the absence of lagged effects means that no dynamic processes can be accommodated, so short-run Granger-Sims tests and long-run impulse responses are precluded. This raises questions about the practical use of $\beta_{y0}^{(x)}$ or $\beta_{x0}^{(y)}$ for planning interventions or policy formation—this problem is symbolized by our use of ε to show that residuals are not designed to mimic a random impulse u. Although AR residuals can be specified in MLMs (Bolger & Laurenceau, 2013; Skrondal & Rabe-Hesketh, 2004, 2008), this only allows AR dynamics for ε rather than x-y effects.

In sum, random-effects MLM fails to adequately cohere with a logic of causality and suffers from pragmatic issues compared to a GCLM. By this, we do not mean that MLMs are wholly bad or wrong. They can be useful when directions of causal effects are known, unit effects can be assumed uncorrelated or irrelevant, and lagged effects are irrelevant, possibly because of noisy data or because they are too distant in time. Thus, we do not categorically recommend against the model. Instead, we merely clarify issues associated with limited causal inference and pragmatic concerns. Of course, many researchers understand some of these issues, which leads us to the more common fixed-effects MLM specification for analyzing panel data.

Fixed-effects MLM. The fixed-effects MLM is equivalent to Eqs. 3 and 4, but it controls for unit effects—this is what econometricians often mean by "fixed effects." For example, Judge, Ilies, and colleagues do this to eliminate stable individual differences to estimate within-person relationships among affect, job attitudes, work stressors, and the like (Ilies, Johnson, Judge, & Keeney, 2011; Ilies, Scott, & Judge, 2006; Judge & Ilies, 2004; Judge, Scott, & Ilies, 2006). This eliminates person-specific trends to estimate $\beta_{y0}^{(x)}$ and $\beta_{x0}^{(y)}$ using occasion-specific variation (for the prevalence of this, see Beal, 2015; Beal & Weiss, 2003; Bolger & Laurenceau, 2013; Curran & Bauer, 2011; Curran, Lee, Howard, Lane, & MacCallum, 2012; Hoffman, 2015; Hoffman & Stawski, 2009; Nezlek, 2012a, 2012b; Walls, Jung, & Schwartz, 2006; Wang & Maxwell, 2015).

This can be done in various ways (Halaby, 2004), classically with predictors to (dummy) code η_i. Equivalent SEMs allow $\eta_i^{(x)}$ or $\eta_i^{(y)}$ to covary with predictors (Allison, 2009; Bollen & Brand, 2010; Teachman, Duncan, Yeung, & Levy, 2001), or by estimating $\psi_{\eta}^{(xy)}$ as in Figure 2. A common MLM approach is to "group-mean" or "within-group" center predictors to de-mean them with unit averages $\bar{x}_{i.}$ and $\bar{y}_{i.}$ (Raudenbush & Bryk, 2002). Centering all variables can also be done (as in Stata's "xtreg, fe") or first-differences can be taken such as $x_{it} - x_{it-1}$ or $y_{it} - y_{it-1}$ and "no information about β is lost" (Arellano, 2003, p. 14). These methods are "fixed-effects" models because it

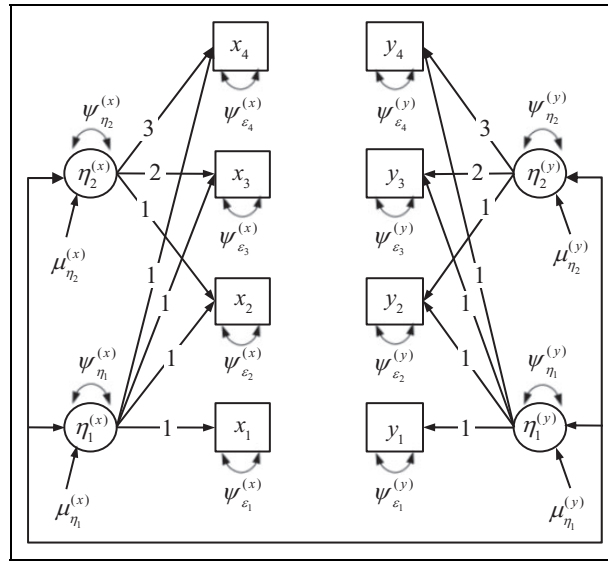

Figure 3. Latent Curve Model Showing Latent Means as μ (Excluding Covariance Labels for Concision).

is as if unit effects are "fixed" rather than allowed to vary as confounders—this language is common in econometrics, but it is useful given its popularity for panel data models and because it clarifies that the method by which stable confounders are eliminated is irrelevant.

However, in terms of the coherence of the model with a causal logic and its pragmatic nature, the same problems exist as for the random-effects MLM, save for holding unit effects constant. Estimated as two separate models, this produces a within-country income→SWB term for Eq. 3: $\beta_{y0}^{(x)} = .095$, $t = 3.507$, $p < .001$; and an SWB→income term for Eq. 4: $\beta_{x0}^{(y)} = .387$, $t = 3.065$, $p = .002$. As before, these do not incorporate a temporal order and cannot be decomposed into $x \rightarrow y$ versus $y \rightarrow x$ causality, x-y feedback, or common causes at a time t. Although "centering removes any between-individual variance in estimates of within-individual relations among the variables, meaning that the relations among the within-individual variables are unconfounded by personality or other individual differences" (Judge et al., 2006, p. 130), this does little to help interpret effects as causal in a short-run or long-run fashion associated with a dynamic process.

In sum, static fixed-effects MLMs are common and control for unit effects. Yet, they fail to cohere with the logic of causality described previously and create pragmatic dilemmas for modeling dynamic effects over time. Again, this does not mean they are wholly problematic and may even be considered acceptable misspecifications when time lags are too distant or data are too noisy to observe lagged effects, but compared to a GCLM they have multiple limitations.

Latent Curve Model (LCM). Another extremely common model is the LCM (i.e., latent growth model; McArdle & Nesselroade, 2003), which estimates unit-specific trends over time. However, these are static models because they omit lagged effects, even though researchers often refer to them as indicating "dynamic" relationships among trends. For example, Pitariu and Ployhart (2010) illustrate this by predicting employee performance trends using trends in effort over time, while predicting both of these trends with a time-invariant measure of team diversity.

To critically explore this logic, we start with a simple and familiar example of an LCM using SEM notation (see Figure 3; for alternatives, see Bollen & Curran, 2006; Curran, 2003):

$$x_{it} = \lambda_{1t}\eta_{1i}^{(x)} + \lambda_{2t}\eta_{2i}^{(x)} + \varepsilon_{it}^{(x)} \tag{5}$$

$$y_{it} = \lambda_{1t}\eta_{1i}^{(y)} + \lambda_{2t}\eta_{2i}^{(y)} + \varepsilon_{it}^{(y)} \tag{6}$$

with all terms as before except for two changes. First, $\lambda_{1t} = 1$ and time is treated as the predictor $\lambda_{2t} = t - 1$, implying an intercept η_{1i} at $t = 1$ and a unit-specific trend or slope factor η_{2i} (Bollen & Curran, 2006). Second, occasion effects α_t are set to zero, so observed means and covariances over T are modeled entirely by the trend variables' means and covariances: $\boldsymbol{\eta}_\eta \sim \mathrm{MVN}(\boldsymbol{\mu}_\eta, \boldsymbol{\psi}_\eta)$. For illustrative purposes, this LCM fits our data adequately (CFI = .96, TLI = .96, SRMR = .08, RMSEA = .09), with R^2 ranging from .90 to .99 across all T for both variables.

Results show positive growth for income and SWB: income intercept $\mu_{\eta_1}^{(x)} = 7.681$, $t = 96.095$, $p < .001$; income slope $\mu_{\eta_2}^{(x)} = .016$, $t = 2.579$, $p < .01$; SWB intercept $\mu_{\eta_1}^{(y)} = 5.331$, $t = 55.417$, $p < .001$; SWB slope $\mu_{\eta_2}^{(y)} = .026$, $t = 2.491$, $p < .013$. More importantly, the relationship among the slopes can be used for inference, which is a correlation $\psi_{\eta_2}^{(xy)} = .576$, $t = 3.862$, $p < .001$, indicating a positive relationship for income and SWB trends. With this, authors often draw causal inferences by treating $\eta_{2i}^{(x)}$ or $\eta_{2i}^{(y)}$ as an outcome of the other and/or by using time-invariant predictors (e.g., Pitariu & Ployhart, 2010; Raudenbush, 2001). Yet, this creates concerns about coherence with a logic of causality and the pragmatic nature of the LCM.

To first tackle the issue of causality as a temporal process, in LCM there seems to be "an effect of time" by using it as a predictor, leading some researchers to treat trends as if time was their cause (e.g., Curran & Bauer, 2011; Curran et al., 2012; Wang & Maxwell, 2015). Yet, "an effect of time" here is potentially misleading, as time defines causality rather than itself being a causal factor (Pitariu & Ployhart, 2010; Voelkle & Oud, 2015). In turn, by conceptualizing time as a cause, researchers can easily overlook the causal processes that may be of interest, such as socialization, institutionalization, or maturation. Indeed, "although time is inextricably linked to the concept of development, in itself it cannot explain any aspect of developmental change" (Baltes, Reese, & Nesselroade, 1988, p. 108). In turn, perhaps the GCLM offers a better way to treat trends as interactions among time- and unit-specific factors $\lambda_t\eta_i$, while acknowledging that lagged effects may also exist (see Arellano, 2003; Bai, 2013; Boumahdi & Thomas, 2008).

This point leads to concerns over the LCMs static nature. As Eqs. 5 and 6 show, there are no temporal dynamics as dependence of the future on the past, so causal effects are not modeled. Instead, the variables available for causal inference are time-invariant factors like $\eta_{2i}^{(x)}$ or $\eta_{2i}^{(y)}$, which omit a temporal dynamic needed to establish causality (Ahn, Lee, & Schmidt, 2001, 2013; Bai, 2009; Nauges & Thomas, 2003). Thus, as with static MLMs, LCMs lead to the dilemma of having to accept a theory of instantaneous causality or accept that any dynamic effects captured by η_i are misspecified. Also, treating an intercept $\eta_{1i}^{(x)}$ or $\eta_{1i}^{(y)}$ as a predictor based on the fact that it represents an initial occasion does not help, because trends are defined by all η_i terms.

Next, in terms of bidirectional effects and controlling for confounds, without relying on a time-varying element, there is no way to know if $\eta_{2i}^{(x)} \rightarrow \eta_{2i}^{(y)}$ versus $\eta_{2i}^{(y)} \rightarrow \eta_{2i}^{(x)}$, or if feedback exists, or if a third variable is causing both. Again, the point of using panel data is to establish a temporal order, which LCMs do not account for. This is exacerbated by LCMs treating change as being a function of only stable factors η_i (e.g., individual personality or culture), implying that there are no population-level occasion effects α_t that are distinct from the trends of interest, and implying that the trends are not due to the persistence of random impulses u_{it}.

To explain, η_i is time-invariant and therefore implies a systematic, deterministic process over time, such as systematic changes in income due to stable cultural factors. Yet, variables like income often show a random or stochastic trend, with AR terms close to 1 (we find $\beta_{x1}^{(x)} = .958$). Thus, the trends in LCM may be due to population factors α_t or persistent random impulses rather than

systematic, stable factors over time. Indeed, in the case of stochastic trends due to persistent impulses (e.g., AR = 1), time as a predictor can erroneously account for substantial variance (Nelson & Kang, 1984). Thus, a correlation $\psi_{\eta_2}^{(xy)} = .537$ among LCM slopes (and other time-invariant variables) may be spurious, reflecting shared stochastic trends (Braun, Kuljanin, & DeShon, 2013; Kuljanin, Braun, & DeShon, 2011; Nelson & Kang, 1981; Nelson & Plosser, 1982; Watson, 1986). Indeed, some researchers note that "the assumption of a stochastic trend is often more realistic than . . . a deterministic trend" (Box et al., 2008, p. 101), and "deterministic trend models are so implausible that they should never be imposed unless there is very strong supporting evidence" (Harvey, 1997, p. 196). Our view is more tempered, but we do think it is reasonable to give α_t, AR, MA, CL, and CLMA terms the opportunity to account for trends.

Finally, in terms of LCM's pragmatic nature, it allows descriptive curve fitting, but it does not incorporate dynamic effects. In turn, it offers little help for planning interventions—how should this be done using $\eta_{2i}^{(x)}$ or $\eta_{2i}^{(y)}$ given that causal order is ignored and they are time-invariant? As Stock and Watson note for determining causal effects, "the most reliable way to handle a trend in a series is to transform the series so that it does not have a trend" (2003, p. 466; see also Curran & Bauer, 2011; Curran et al., 2012; Wang & Maxwell, 2015). Although there is no single way to de-trend data (Heckman, 1991; Stock & Watson, 1988; Yule, 1921, 1926), to assume that only deterministic trends $\eta_{2i}^{(x)}$ and $\eta_{2i}^{(y)}$ exist seems questionable.

Dynamic Models

Dynamic models are differentiated from static models by incorporating lagged effects such as AR, MA, CL, and CLMA terms. In what follows we discuss common dynamic models and explore their coherence with a causal logic along with their more pragmatic characteristics.

Cross-Lagged Models. As we have described, organizational researchers regularly use a cross-lagged model to analyze panel data as follows (see Figure 4a):

$$x_{it} = \alpha_t^{(x)} + \beta_{x1}^{(x)} x_{it-1} + \beta_{y1}^{(x)} y_{it-1} + \varepsilon_{it}^{(x)} \tag{7}$$

$$y_{it} = \alpha_t^{(y)} + \beta_{y1}^{(y)} y_{it-1} + \beta_{x1}^{(y)} x_{it-1} + \varepsilon_{it}^{(y)} \tag{8}$$

wherein all terms are as described previously, except we show a residual as ε_{it} for reasons that we discuss momentarily. Although higher-order lags for AR and CL terms are possible (Cole & Maxwell, 2003; Little, 2013; Maxwell & Cole, 2007; Maxwell, Cole, & Mitchell, 2011), in practice researchers often default to an AR(1)CL(1) model (e.g., Eby, Butts, Hoffman, & Sauer, 2015; Maynard, Luciano, D'Innocenzo, Mathieu, & Dean, 2014; Nohe, Meier, Sonntag, & Michel, 2015). We estimate this model (see Table 1, Model 2.1), which follows the original analysis of our data in Diener et al. (2013).

Model fit is adequate (CFI = .96, TLI = .95, SRMR = .07, RMSEA = .10), with AR terms showing high persistence for income $\beta_{x1}^{(x)} = .952$, $t = 59.783$, $p < .001$, and SWB $\beta_{y1}^{(y)} = .877$, $t = 37.467$, $p < .001$. Also, CL effects are positive and statistically significant, with income→SWB $\beta_{x1}^{(y)} = .108$, $t = 3.813$, $p < .001$, and SWB→income $\beta_{y1}^{(x)} = .027$, $t = 2.324$, $p = .02$. These results point to strong persistence of random impulses and large short-run effects among the variables. However, there are a few reasons to view these results cautiously.

In terms of a logic of causation, the cross-lagged model has the benefit of incorporating lagged effects and accounts for the possibility of bidirectional effects. However, compared to GCLM results, SWB has much stronger persistence over time, which seems misaligned with past findings of SWB being mean-reverting (e.g., Clark, Frijters, & Shields, 2008; Diener & Lucas, 1999).

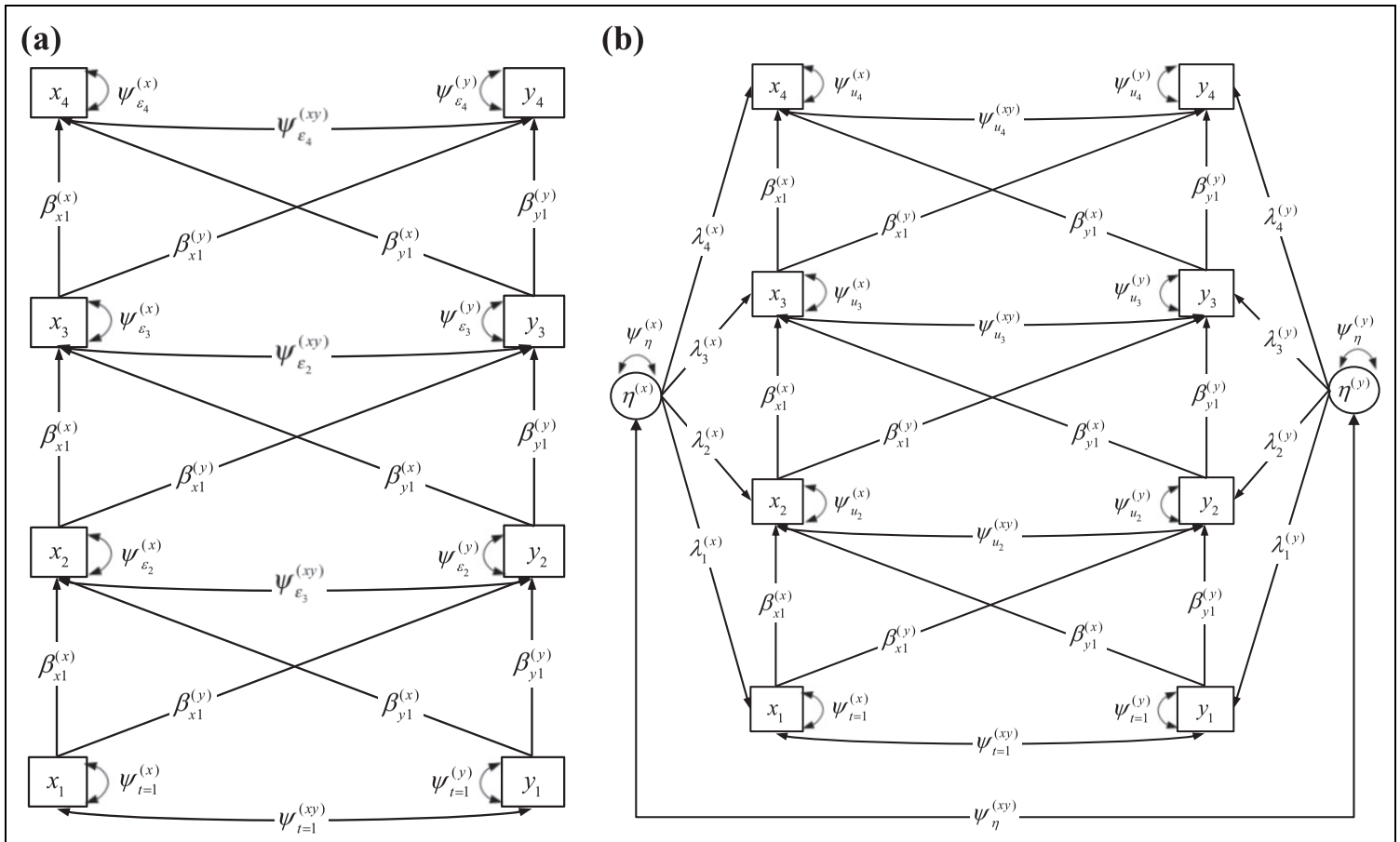

Figure 4. (a) Typical Cross-Lagged Model. (b) Cross-Lagged Model Modified to Account for Unit Effects η.

Similarly, CL effects are larger and statistically significant, and the SWB→income effect changes sign. One reason for these differences is that conventional cross-lagged models do not control for unit effects $\eta_i^{(x)}$ and $\eta_i^{(y)}$, which can bias β terms (Baltagi, 2013b; Hamaker, Kuiper, & Grasman, 2015; Hsiao, 2014). Specifically, in Eqs. 7 and 8, the $\varepsilon_{it}^{(x)}$ and $\varepsilon_{it}^{(y)}$ terms will reflect both a unit effect η_i and an impulse u_{it}. The result is that AR terms are larger due to the covariance over time associated with η_i (Arellano, 2003; Morgan & Winship, 2014; Vaisey & Miles, 2017), and CL terms are different for the same reason. Although using time-invariant controls is often recommended (e.g., Little, 2013), this rarely controls for unit effects entirely.

Similar problems arise in MLMs, which can be used to estimate similar models (Beal & Weiss, 2003; Bolger & Laurenceau, 2013; Griffin, 1997; Nezlek, 2001, 2008, 2011, 2012a, 2012b; see also Kling, Harvey, & Maclean, 2017). To start, a random-effects MLM also fails to control unit effects (e.g., Schonfeld & Rindskopf, 2007), which we show by estimating Eqs. 7 and 8 with Stata's "xtreg, mle" (see Table 1, Model 2.2), resulting in similar AR terms of income $\beta_{x1}^{(x)} = .94$, $t = 55.01$, $p < .001$, and SWB $\beta_{y1}^{(y)} = .856$, $t = 29.17$, $p < .001$, and an income→SWB CL term $\beta_{x1}^{(y)} = .122$, $t = 3.39$, $p < .001$, and for SWB→income $\beta_{y1}^{(x)} = .036$, $t = 2.56$, $p < .020$.

This problem of bias in MLM has been recognized and many authors attempt to solve it by group-mean centering their data (i.e., a "within-group" or WG model), as if to estimate a fixed-effects static model (e.g., Beal, Trougakos, Weiss, & Green, 2006; Bono, Foldes, Vinson, & Muros, 2007; Dalal, Lam, Weiss, Welch, & Hulin, 2009; Fisher & Noble, 2004; Gielnik, Spitzmuller, Schmitt, Klemann, & Frese, 2015; Hoffman, 2015; Ilies et al., 2006; Ilies et al., 2011; Rovine & Walls, 2006). This is often done because researchers believe that this centering presents no issues beyond those of static MLMs (e.g., Beal, 2015; Duckworth, Tsukayama, & May, 2010; Enders & Tofighi, 2007; see also Uy, Foo, & Aguinis, 2010). However, this is not the case—it causes "dynamic panel bias."

To explain, centering the variables by subtracting unit means produces:

$$x_{it} - \bar{x}_{i.} = \alpha_t^{(x)} + \beta_{x1}^{(x)}(x_{it-1} - \bar{x}_{i.}) + \beta_{y1}^{(x)}(y_{it-1} - \bar{y}_{i.}) + \varepsilon_{it}^{(x)} \tag{9}$$

$$y_{it} - \bar{y}_{i.} = \alpha_t^{(y)} + \beta_{y1}^{(y)}(y_{it-1} - \bar{y}_{i.}) + \beta_{x1}^{(y)}(x_{it-1} - \bar{x}_{i.}) + \varepsilon_{it}^{(y)} \tag{10}$$

which attempts to control for unit effects by assuming a unit average such as $\bar{y}_{i.}$ is a good estimate of $\eta_i^{(y)}$. Yet, just as a scale mean will correlate with true-score and item-specific variance, $\bar{y}_{i.}$ is a function of a unit effect $\eta_i^{(y)}$ and impulses $u_{it}^{(y)}$ (Bond, 2002). In turn, because AR and CL terms reflect persistent impulses, subtracting $\bar{y}_{i.}$ induces *negative* AR bias and also impacts CL terms.

To understand this point, consider the $T = 2$ case for y_{i1} and y_{i2}. Here, subtracting $\bar{y}_{i.}$ indices a negative AR bias because what results is a positive and negative observation $y_{i1} - \bar{y}_{i.}$ and $y_{i2} - \bar{y}_{i.}$. Because the covariance used to estimate $\bar{y}_{i.}$ is due to $\eta_i^{(y)}$ *and* AR terms due to $u_{it}^{(y)}$, removing $\bar{y}_{i.}$ eliminates an AR effect because this effect is a function of persistence in an impulse $u_{it}^{(y)}$ (i.e., the impulse is subtracted, and thus so is the AR effect) resulting in a biased impulse ε_{it} in Eqs. 9 and 10, and altering AR and CL estimates (Alvarez & Arellano, 2003).

For over 40 years econometricians have known about this problem in models that include lagged effects, which they refer to as dynamic panel bias (Nerlove, 1967, 1971; Sevestre & Trognon, 1985). As Nickell described in 1981, the negative bias for AR terms take the form:

$$-\frac{1 + \beta_{y1}^{(y)}}{T - 1} \tag{11}$$

Although this bias is reduced as $T \to \infty$, it can be sizable at $T = 30$ or even 100 when AR (and CL) terms are large (Hamaker & Grasman, 2015; Jongerling, Laurenceau, & Hamaker, 2015; Judson & Owen, 1999; Nerlove, Sevestre, & Balestra, 2008). Unfortunately, the bias is caused by any method that attempts to subtract unit effects, including first-differencing and predictors that

(dummy) code for η_i (Arellano, 2003), which seems of particular import when the direction of CL effects is of explicit interest (e.g., Vancouver & Kendall, 2006; Vancouver, Thompson, Tischner, & Putka, 2002; Vancouver, Thompson, & Williams, 2001; Yeo & Neal, 2006). Indeed, to our knowledge the only multilevel approach that accounts for unit effects without this bias is dynamic structural equation modeling or DSEM (see Asparouhov, Hamaker, & Muthén, 2018).

To show the problem, we estimate Eqs. 9 and 10 using Stata's "xtreg, fe" (see Table 1, Model 2.3), which group-mean centers all variables—the same results emerge when group-mean centering in cross-lagged SEM. The result is very small AR estimates for income $\beta_{x1}^{(x)} = .079$, $t = 1.48$, $p = .139$, and for SWB $\beta_{y1}^{(y)} = .031$, $t = 0.49$, $p = .622$, with a larger CL term income→SWB $\beta_{x1}^{(y)} = .275$, $t = 2.18$, $p = .03$, and smaller one for SWB→income $\beta_{y1}^{(x)} = .024$, $t = 0.92$, $p = .358$.

In sum, cross-lagged SEM and random-effects MLM are similarly biased, and group-mean centering or other approaches to estimate fixed-effects models lead to dynamic panel bias. This said, "the fact that these two estimators are likely to be biased in opposite directions [for AR effects] is useful. Thus we might hope that a candidate consistent estimator will lie between the . . . [two AR] estimates" (Bond, 2002, p. 144). There are various ways to do this (e.g., Allison, Williams, & Moral-Benito, 2017; Asparouhov et al., 2018; Hamaker et al., 2015), such as a cross-lagged SEM with $\eta_i^{(x)}$ and $\eta_i^{(y)}$ having an unrestricted $\psi_\eta^{(xy)}$ for a "fixed-effects" approach that avoids dynamic panel bias (see Figure 4b). This is possible because SEM treats $\eta_i^{(x)}$ and $\eta_i^{(y)}$ as missing data that have a relationship with lagged predictors (Bai, 2013; Moral-Benito, 2013). We show this with a cross-lagged SEM wherein $\eta_i^{(x)}$ and $\eta_i^{(y)}$ have unrestricted covariance $\psi_\eta^{(xy)}$, with time-varying unit effects $\lambda_t^{(x)}$ and $\lambda_t^{(y)}$ and co-movements $\psi_{u_t}^{(xy)}$ (see a variant in Hamaker et al., 2015). As Figure 4b shows, this is a GCLM with MA and CLMA terms eliminated.

This improves model fit over the cross-lagged SEM, ostensibly because AR and CL effects are no longer tasked with accounting for unit effect (co)variance (CFI = .98, TLI = .97, SRMR = .03, RMSEA = .09). Also, AR terms are between the cross-lagged SEM/random-effects MLM and group-mean centered MLM estimates (see Table 1, Model 2.4). The AR term for income is $\beta_{x1}^{(x)} = .583$, $t = 2.98$, $p = .003$, and for SWB it is $\beta_{y1}^{(y)} = .674$, $t = 7.43$, $p < .001$, which come close to total AR and MA effects $\beta_{x.}^{(x)} + \delta_{x.}^{(x)}$ and $\beta_{y1}^{(y)} + \delta_{y1}^{(y)}$ in the GCLM (in Table 1, Model 1). Also, CL terms are no longer significant, with SWB→income $\beta_{y1}^{(x)} = .004$, $t = 0.134$, $p = .89$, and income→SWB $\beta_{x1}^{(y)} = .014$, $t = 0.19$, $p = .85$, showing how unit effects can account for the same covariance producing CL effects in the cross-lagged SEM/random-effects MLM.

With this in mind, it is notable that many published cross-lagged models assume η_i away or attempt to address it with control variables (e.g., Cole & Maxwell, 2003; du Toit & Browne, 2001; Little, 2013; Maxwell & Cole, 2007; Maxwell et al., 2011). Although theoretically arguing against η_i is possible, such arguments are typically absent and control variables will probably not account for unit effects entirely. Also, even if authors wanted to control for η_i, roughly half of cross-lagged models have only $T = 2$ occasions (Hamaker et al., 2015), making it impossible to control for unit effects and estimate AR terms, which requires $T \geq 3$ (Allison et al., 2017). Like recommendations for MLMs with lagged effects (e.g., Hoffman, 2015; Nezlek, 2012a, 2012b), the problem of small T and η_i persists in even leading organizational journals (e.g., Eby et al., 2015; Maynard et al., 2014; Nohe et al., 2015; Riketta, 2008).

In sum, classic cross-lagged SEMs and MLMs should be avoided when seeking to make causal inferences in panel data. Conveniently, with $T \geq 3$ a cross-lagged SEM can be modified to account for η_i (Allison et al., 2017; Bollen & Brand, 2010; Hamaker et al., 2015; Teachman et al., 2001). Pragmatically, this is useful because cross-lagged models allow estimating short-run and long-run effects using impulse responses. Yet, dynamics are more limited than a GCLM by excluding MA and CLMA terms. Conveniently, just as cross-lagged models can be modified to account for η_i, they can also be modified to include MA and CLMA terms, as we have shown.

Arellano-Bond Methods

There are many econometric approaches to panel data analysis found in organizational research, but a popular example is the Arellano-Bond (AB) method (see overviews in Bond, 2002; Bun & Sarafidis, 2015; for foundational work, see also Arellano & Bond, 1991; Arellano & Bover, 1995; Blundell & Bond, 1998; Holtz-Eakin, Newey, & Rosen, 1988). For example, Piening, Baluch, and Salge (2013) used the AB method to show a positive effect of HR practices on organizational performance (for other examples, see Barkema & Schijven, 2008; Foster, 2010; George, 2005; Goldstein, 2012). To we examine this method by briefly outlining its logic and some of its causality-oriented and pragmatic dilemmas, with more details in Online Appendix B (see also Arellano, 2003; Baltagi, 2013b; Roodman, 2009a, 2009b).

The problem that AB methods address is that a unit effect η_i is unobserved, but fixed-effects methods that eliminate it cause dynamic panel bias. To overcome this, AB methods use variables in differences (e.g., $y_{it} - y_{it-1}$) and levels (e.g., y_{it}). Consider a classic AB model:

$$x_{it} - x_{it-1} = \alpha_t^{(x)} - \alpha_{t-1}^{(x)} + \beta_{x1}^{(x)}(x_{it-1} - x_{it-2}) + \beta_{y1}^{(x)}(y_{it-1} - y_{it-2}) + \varepsilon_{it}^{(x)} - e_{it-1}^{(x)} \tag{12}$$

$$y_{it} - y_{it-1} = \alpha_t^{(y)} - \alpha_{t-1}^{(y)} + \beta_{y1}^{(y)}(y_{it-1} - y_{it-2}) + \beta_{x1}^{(y)}(x_{it-1} - x_{it-2}) + \varepsilon_{it}^{(y)} - \varepsilon_{it-1}^{(y)} \tag{13}$$

wherein this subtracts η_i because it exists at both current and past occasions. As we noted above, "no information about β is lost" when differencing in static models (Arellano, 2003, p. 14), but in the presence of lagged predictors this induces dynamic panel bias (Bond, 2002).

AB methods attempt to eliminate η_i and dynamic panel bias based on the facts that (a) a first-difference $y_{it} - y_{it-1}$ eliminates η_i, but causes dynamic panel bias; and (b) a lagged level y_{it-1} includes η_i, it but does not cause dynamic panel bias. In turn, because neither η_i nor dynamic panel bias exist in the overlap of differences and levels, AB methods can be thought of as using lagged levels to predict differences, and then substituting the predicted part for the differences in Eqs. 12 and 13. This is "instrumenting" or an "instrumental variable" procedure, with lagged levels being instruments for differences. With this logic, a generalized methods of moments (GMM) estimator is used that we treat in Online Appendix B, but here note that this "difference-GMM" approach is often augmented by a "system-GMM" approach that incorporates variables in levels using differences as instruments (Blundell & Bond, 1998; Roodman, 2009a).

To evaluate this method, we first note that it allows a coherent temporal order for causal effects. Also, bidirectional causality and potential confounds are addressed by using lagged instruments, such that the past of a predictor should cause the future of an outcome, but the reverse should not be true. In turn, this is meant to eliminate reverse causation and confounding by common causes. Also, although the model excludes MA and CLMA terms and thus limits the range of potential dynamic processes it can model, there is the pragmatic benefit of a particular long-run effect that can be estimated (Baltagi, 2013b). Specifically, by estimating each model for an outcome separately, this allows a thought experiment wherein a predictor is increased by 1-unit and this is maintained over time, with effects "aggregating" at each occasion via AR terms. This allows computing a long-run effect shown here for the $x \rightarrow y$ case as $\beta_{x1}^{(y)}/(1 - \beta_{y1}^{(y)})$.

Yet, using the AB method requires checking its assumption that the information from instruments is unrelated to residuals (i.e., instruments should be related to outcomes only via predictors). This is checked by residual autocorrelation and Sargan/Hansen tests with a null hypothesis of no instrument-residual covariance, meaning that small p-values entail rejecting the assumption of valid instruments (i.e., large p-values imply assumptions are met). If these tests show small p-values, instruments can be lagged further until a valid set of instruments is found.

Unfortunately, this approach leads to concerns related to controlling for confounds and the method's practical implementation. First, using too few instruments causes inefficiency (i.e., large *SE*s), but using too many causes overfitting that reintroduces unit effects. Also, if changes over time are systematic, differences can correlate with η_i, rendering instruments invalid. This problem is compounded by the fact that with many instruments, Sargan/Hansen tests will have large *p*-values that suggest valid instruments even if they are not (see Online Appendix B; Roodman, 2009a). Thus, as the amount of information instruments offer for GMM estimation approaches *N*, both overfitting and invalid Sargan/Hansen tests are expected. This makes it hard to ensure confounds are controlled, while leading to pragmatic concerns over how to conduct analyses given that as *T* increases so does the number of potential instrument sets.

To show this, we first took a system-GMM approach using Stata's "xtabond2," with all available lags to instrument the equations in differences and a single lag for equations in levels (see Table 1, Model 3.1; see Online Appendix B and Stata output). The AR terms show a larger estimate for income when compared to the previous cross-lagged SEM controlling for η_i, $\beta_{x1}^{(x)} = .982$, $t = 14.81$, $p < .001$, but a more similar estimate for SWB $\beta_{y1}^{(y)} = .66$, $t = 5.94$, $p < .001$, with CL terms showing no SWB→income effect $\beta_{y1}^{(x)} = .011$, $t = 0.28$, $p = .782$, nor an income→SWB effect $\beta_{x1}^{(y)} = .184$, $t = 1.55$, $p = .121$. Here, the effects of SWB are similar to what we expect, but the effects of income are similar to those from typical cross-lagged SEM/random-effects MLM, suggesting overfitting and/or a correlation among η_i and differences.

When checking the assumption of instrument validity, the Sargan/Hansen tests show $p < .5$ in levels equations. Yet, with many instruments this *p*-value is biased toward zero, and thus even this large *p*-value suggests a potential correlation among η_i and differenced instruments because, as noted in Online Appendix B, the amount of information gained by the instruments is close to our sample size of $N = 135$. Thus, large *p*-values are expected for Sargan/Hansen tests and therefore $p < .05$ may indicate invalid instruments—but we cannot know this with certainty.

To address these issues, we estimate a second model in differences only to reduce the instrument count, which shows better Sargan/Hansen test results (the smallest $p = .683$). Here, AR terms somewhat acceptable but are much less efficient (see Table 1, Model 3.2), with income $\beta_{x1}^{(x)} = .458$, $t = 1.47$, $p = .141$, and SWB $\beta_{y1}^{(y)} = .411$, $t = 2.12$, $p = .034$, with CL terms showing an SWB→income effect $\beta_{y1}^{(x)} = .138$, $t = 1.94$, $p = .054$, but no income→SWB effect $\beta_{x1}^{(y)} = .063$, $t = 0.08$, $p = .938$. However, we are wary of these results because changing the instrument set changes them dramatically. Indeed, by varying the instrument sets, we observed AR effects for income ranging from -.3 to 1.2, as well as large ranges for other coefficients. This shows the added problem of having to correctly specify both a substantive model *and* instrument sets.

To overcome the issues of GMM, maximum-likelihood approaches in SEM exist (Allison et al., 2017; Bai, 2013; Moral-Benito, 2013), such as Stata's "xtdpdml" tool (Williams, Allison, & Moral-Benito, 2018). To emphasize the pragmatic value of SEM for panel data, we illustrate a similar approach using separate models for income and SWB, with a first occasion $t = 1$ allowed to freely correlate with η_i and all predictors (for the income→SWB case, see Figure 5). Also, predictors are allowed to covary with η_i to produce a fixed-effects model that avoids dynamic panel bias, and predictors covary with past and contemporaneous residuals to account for potential reverse-causation and common causes (see Allison et al., 2017; Bollen & Brand, 2010).

The models we estimate show adequate fit (for income, CFI = .99, TLI = .97, SRMR = .02, RMSEA = .07; for SWB, CFI = .97, TLI = .94, SRMR = .03, RMSEA = .11), and results are consistent with the cross-lagged SEM with covariance among unit effects in Figure 4b (see Table 1, Model 3.3 and compare with Model 2.4). The AR term for income is $\beta_{x1}^{(x)} = .59$, $t = 2.95$, $p = .003$, and for SWB $\beta_{y1}^{(y)} = .62$, $t = 7.44$, $p < .001$, with CL effects SWB→income $\beta_{y1}^{(x)} = .053$, $t = 0.877$, $p = .38$ and income→SWB $\beta_{x1}^{(y)} = .076$, $t = 0.275$, $p = .783$. These results have the benefit of

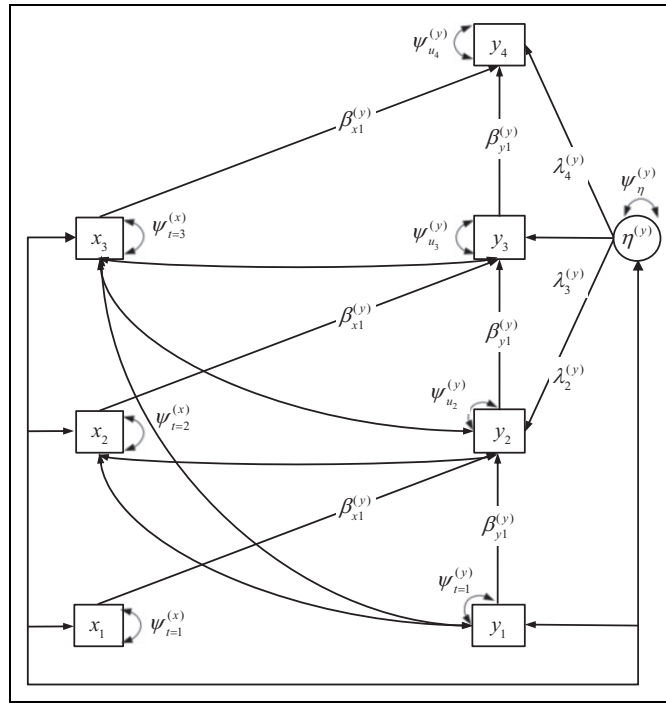

Figure 5. Alternative to Arellano-Bond Methods Using SEM (Showing an Income→SWB Model and Excluding Covariance Labels for Concision).

maximum-likelihood, which addresses some issues of GMM (Hsiao, Pesaran, & Tahmiscioglu, 2002). This shows the benefits of SEM in general, but also Figure 5 suggests a GCLM extension that has causal and pragmatic benefits: control variables can be included without being specified as outcomes by allowing them to covary with η_i as well as past and current occasions of other variables—although there are issues to consider with this approach, noted in Online Appendix B.

In sum, AB methods have issues in terms of controlling for confounds while also having the pragmatic problem of being difficult to use. This may be why researchers caution that "where system GMM offers the most hope, it may offer the least help" (Roodman, 2009b). To overcome the problems of AB methods, an SEM approach using either our GCLM or separate models for dependent variables can be used. In our view, this shows the benefits of our SEM framework in general, even for those trained in an econometric tradition.

Autoregressive Latent Trajectories

The autoregressive latent trajectory (ALT) model combines cross-lagged and LCM methods (Bollen & Curran, 2004, 2006; Bollen & Zimmer, 2010; Curran & Bollen, 2001). Although ALT is not common in organizational research, we include it here because it models both trends and lagged effects, which addresses many causal and pragmatic concerns we have with other methods. We show an ALT as follows (Figure 6a):

$$x_{it} = \lambda_{1t}\eta^{(x)}_{1i} + \lambda_{2t}\eta^{(x)}_{2i} + \beta^{(x)}_{x1}x_{it-1} + \beta^{(x)}_{y1}y_{it-1} + \varepsilon^{(x)}_{it} \tag{14}$$

$$y_{it} = \lambda_{1t}\eta^{(y)}_{1i} + \lambda_{2t}\eta^{(y)}_{2i} + \beta^{(y)}_{y1}y_{it-1} + \beta^{(y)}_{x1}x_{it-1} + \varepsilon^{(y)}_{it} \tag{15}$$

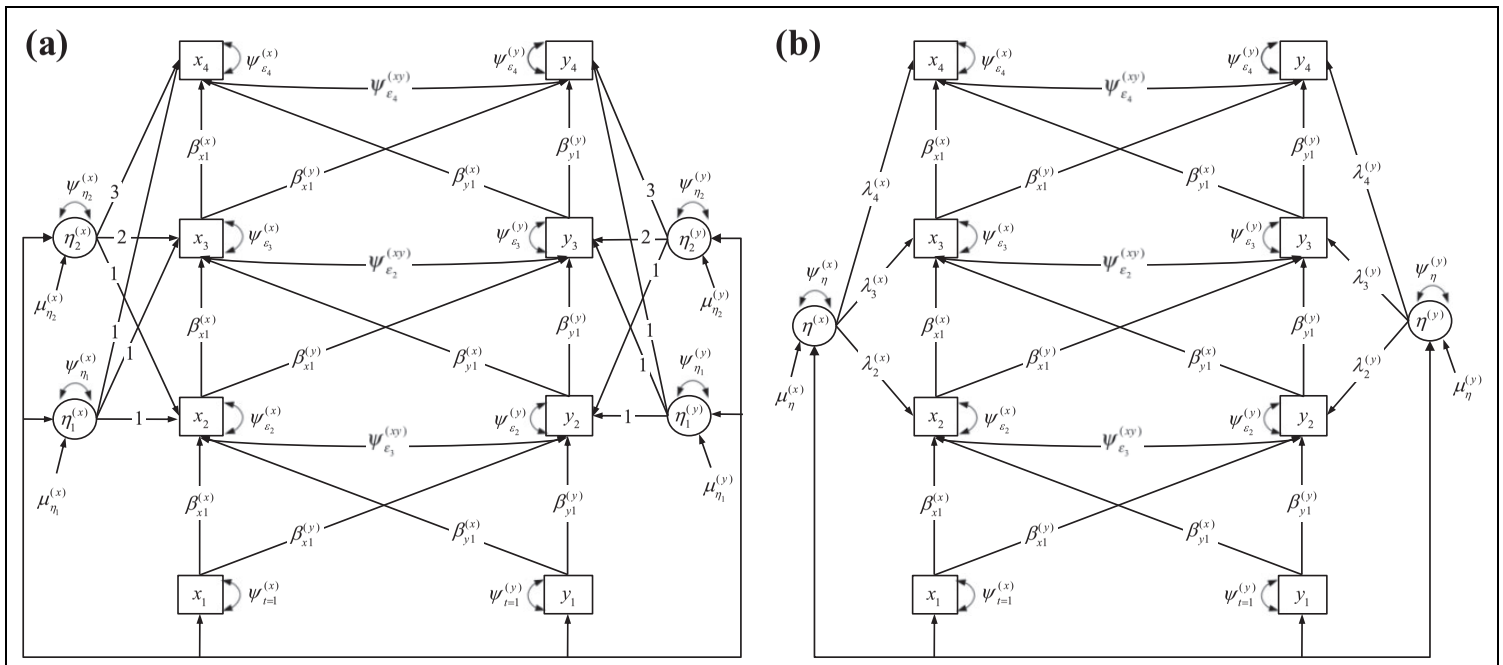

Figure 6. (a) Autoregressive Latent Trajectory Model With a Linear Trajectory and Showing Latent Means as μ Terms (Excluding Covariance Labels for Concision). (b) Autoregressive Latent Trajectory Model With a Model-Estimated Trajectory and Showing Latent Means as μ Terms (Excluding Covariance Labels for Concision).

wherein all terms are as before for the LCM, with $\lambda_{1t} = 1$ and $\lambda_{2t} = t - 1$ implying a unit-specific linear trend with intercept η_{1i} and slope η_{2i}, which have an estimated mean structure (involving μ_η) as in an LCM. With this generality, the ALT is similar to various approaches that detrend observed data in a model-based way while estimating AR and CL effects (see Ahn et al., 2001, 2013; Bai, 2009; Nauges & Thomas, 2003). However, like the LCM, occasion effects α_t are constrained to zero so that a mean structure must be accounted for by the η_i trend terms.

Although ALT models are often given substantive interpretations for trends associated with η_i, we treat the ALT as a model that estimates lagged effects while accounting for η_i and avoiding dynamic panel bias. To show this, we estimate Eqs. 15 and 16 with a linear trend as in Figure 6a (Table 1, Model 4.1). This model has unrestricted covariance among initial occasions and unit effects, which helps avoid assumptions of about η_i at the first occasion (for insight, see Allison et al., 2017; Hamaker, 2005). Yet, this ALT imposes a functional form for η_i (here a linear trajectory) that can strongly impact estimates of AR and CL terms. We show this with the second ALT in Figure 6b, which has only one effect for each of x and y, but with λ_t unrestricted as in our GCLM (Table 1, Model 4.2). This differs from other models above by constraining α_t to zero, which identifies a mean structure for η_i and clarifies how LCMs and ALTs ignore occasion effects (i.e., global shocks), which is a strong assumption of that all trends are systematic rather than also being due to time-specific effects that the ALT does not control.

In our demonstration, maximum-likelihood estimation of the first ALT failed, as we often encounter in the presence of missing data in early occasions that are not treated as dependent variables—a potential pragmatic issue of the ALT. To solve this, we used a Bayes procedure with Markov Chain Monte Carlo estimation with "uninformative" or "diffuse" priors to approximate maximum-likelihood results (Muthén & Asparouhov, 2012; see Online Appendix C for more details). For consistency, we report results using frequentist concepts such as t-values and p-values, but rely on their Bayesian analogues that are based on posterior distributions.

Results for the first model in Figure 6a show effects that are different from those above (Table 1, Model 4.1). The AR term for income is much smaller than that found in our GCLM, with $\beta_{x1}^{(x)} = .083$ $= .083$, $t = 0.703$, $p = .112$, but SWB is in a more similar range, with $\beta_{y1}^{(y)} = .451$, $t = 4.465$, $p < .001$. The CL effects also change but remain nonsignificant, with an SWB→income effect $\beta_{y1}^{(x)} = .019$, $t =$ 0.5, $p = .156$, and an income→SWB effect $\beta_{x1}^{(y)} = .067$, $t = 0.335$, $p = .186$.

Alternatively, the second ALT in Figure 6b with a single term η_i and an unrestricted λ_t (and α_t constrained to zero) for each series also has adequate fit to the data (CFI = .97, TLI = .96, SRMR = .06, RMSEA = .09) but shows different results (see Table 1, Model 4.2). Here, AR effects are more reasonable for income $\beta_{x1}^{(x)} = .561$, $t = 2.042$, $p = .041$, and for SWB $\beta_{y1}^{(y)} = .597$, $t = 5.369$, $p < .001$. Although the CL effects show no significant SWB→income effect $\beta_{y1}^{(x)} = .046$, $t = 0.898$, $p = .369$, the income→SWB effect is $\beta_{x1}^{(y)} = .318$, $t = 3.662$, $p < .001$. This difference between these ALT models occurs because the trends compete with lagged effects to explain observed covariance (Heckman, 1991; Voelkle, 2008; Wang & Maxwell, 2015). Indeed, especially if $t = 1$ occasions are treated as independent, ALT trends can easily account for too much covariance, which may be exacerbated in multivariate cases (Sims, 1996, 2000).

Although the second ALT with time-varying unit effects shows AR terms that appear more reasonable, it has an income→SWB effect that is not supported in our GCLM or the cross-lagged model that controls for η_i (Figure 4b and Table 1, Model 2.4), and is unsupported in the previous AB alternative (Figure 5 and Table 1, Model 3.3). The key difference between the second ALT and the other models is that occasion effects are constrained to zero with a mean structure imposed for unit effects—so that if an occasion effect α_t increases, a unit effect η_i increases—which illustrates the importance of estimating occasion effects rather than imposing a mean structure that is necessarily incorporated into a systematic trend associated with η_i.

Perhaps what is most important about these comparisons is that we do not find major differences between AR and CL effects when using models that account for time-varying unit effects terms and allow occasion effects in SEM (Figure 4b, Table 1, Model 2.4; Figure 6b, Table 1, Model 3.3). Indeed, these models show effects that are similar to those from our full GCLM (Figure 1, Table 1, Model 1), unlike models that: ignore η_i (i.e., cross-lagged models; Figure 4a, Table 1, Models 2.1 and 2.2); attempt eliminate η_i as if it were observed (i.e., within-group centering; Table 1, Model 2.3); or over-specify systematic trends (i.e., the first ALT; Figure 6a, Table 1, Model 4.1). In sum, the ALT we describe above—with AR and CL terms constrained to equality over time—may be a valuable tool for researchers who believe that LCM is appropriate and want to estimate lagged effects. However, LCMs are potentially problematic because they ignore occasion effects, which can drastically impact the lagged effects estimated in an ALT. Also, in addition to being difficult to estimate in some cases, the ALT excludes MA and CLMA terms that increase the range of dynamic processes that the model can incorporate.

Discussion

We have compared various static and dynamic panel data models to our GCLM. The static models we treat are random- and fixed-effect models and LCMs, which offer no clear path to causal inference as a temporal process, with LCMs assuming all trends are systematic rather than having elements of randomness. The dynamic models have other problems: typical cross-lagged models fail to control for η_i, and group-mean centering to account for η_i induces dynamic panel bias. Alternatively, Arellano-Bond methods with instruments and GMM may be useful in some cases, but they lead to dilemmas that SEM overcomes. Finally, the ALT combines LCM and lagged terms, which can overfit systematic trends, and even in the simplest case forces occasion effects to take part in these trends. In all cases, MA, CLMA, and time-varying unit effects are typically not specified in these models, giving the GCLM an advantage for estimating effects that do not follow the structure implied by AR and CL effects, such as small but persistent lagged effects or large but temporary lagged effects.

Although we do not compare all panel data models that appear in organization science, other models can often be understood in ways that are consistent with the kinds of comparisons we draw above (e.g., Chow, Ho, Hamaker, & Dolan, 2010; Hamaker & Dolan, 2009; Hamaker, Nesselroade, & Molenaar, 2007; Nesselroade, McArdle, Aggen, & Meyers, 2002). For example, latent change models and related approaches merely estimate effects among variables in differences (e.g., Box et al., 2008; McArdle, 2001, 2009; McArdle & Hamagami, 2001, 2004). These models can be reparameterized as cross-lagged SEMs or panel vector autoregressive models (see Allen & Fildes, 2001; Arellano, 2003; Bai, 2013; Baltagi, 2013a, 2013b; McArdle & Nesselroade, 2014; Moral-Benito, 2013; Usami, Hayes, & McArdle, 2015; Voelkle & Oud, 2015). Thus, such models will encounter the same issues we describe when they do not properly control for η_i or when they overlook the possibility of meaningful MA and CLMA effects.

When considering such parameters, as we have noted, a process should be mapped onto a statistical model using theory and previous findings, as well as substantive and statistical checking. For this purpose, not all of the terms that the GCLM includes need to be specified, but researchers should know that they are available in SEM if they are deemed to be of interest. Indeed, past research has recognized all of the terms included in the GCLM in various ways (e.g., du Toit & Browne, 2001, 2007; Hamaker, Dolan, & Molenaar, 2002; Hamaker et al., 2015; Hamaker & Grasman, 2015), and therefore a GCLM can be seen as bringing these terms together in a coherent and easy-to-implement SEM framework—facilitated by our online supplemental material that allows automatically generating Mplus program code using an Excel file.

This said, especially the comparison of our model with the ALT brings up important issues regarding competition, so to speak, among unit effects and the AR, MA, CL, and CLMA terms that we use for causal inference. The problem is that unit effects can be parameterized in a wide variety of ways (just as AR, MA, CL, and CLMA terms can be), and these specifications will produce different kinds of competition among parameters to explain auto- and cross-covariation (as illustrated by the ALT models we estimate). This issue, in a very general sense, was first discussed by "Student" (1914), who treated time as a predictor in order to detrend longitudinal data (for historical developments, see Hooker, 1905; Tintner, 1940; Yule, 1921, 1926). As Yule (1921) noted in commenting on Student's approach, the problem was that

> if "Student" [1914] desires to remove from his figures secular movements, periodic movements, uniform movements, and accelerated movements—well the reader is left wondering with what sort of movements he does desire to deal . . . . He desires to find the correlation between x and y when every component in each of the variables is eliminated which can well be called a function of the time, and nothing is left but residuals such that the residual of a given year is uncorrelated with those that precede or that follow it . . . . [However], the only residuals which it is easy to conceive as being totally uncorrelated with one another in the manner supposed are errors of observation" (pp. 502-504).

The fact is that any part of a process can be theorized either as a systematic trend of some duration that should be removed or as an AR, MA, CL, or CLMA effect that can have a causal interpretation. Unfortunately, there is no single best way to differentiate trends from such causal effects across all contexts, and attempts to do so often amount to exercises in aesthetic judgment (Heckman, 1991)—consider "smoothing" techniques that are often done in relation to graphical figures. The problem is that "time series variables can, without further restrictions, be thought of as composed of a part with a variable trend, plus a part that is not the trend. But a moment's reflection indicates that this decompositions lacks content . . . one economist's 'trend' can be another's 'cycle'" (Stock & Watson, 1988, p. 150). The fact is that all real-world data are messy and never offer certainty regarding how a model should be constructed or effects conceptualized.

Again, Yule pointed this out long ago, noting that, "it is not my view alone but the view of most writers on the subject up to 1914, that the essential difficulty of the time-correlation problem is the difficulty of isolating for study different components in the total movement of each variable" (1921, p. 501). Unfortunately, no single solution to this problem exists—or can exist—that is applicable to all research contexts. Given the uncertainties here, we recommend including a single time-varying unit effect term $\lambda_t \eta_i$, but other specifications are possible, such as the ALTs that we estimate, which can fundamentally alter the lagged effects used for causal inference. Therefore, we suggest caution when specifying and trying to interpret trends, and note that researchers may wish to conduct sensitivity analyses that look at AR, MA, CL, and CLMA effects under different parameterizations. As we have noted, we also encourage relying on theory to decide how to specify a parsimonious model that closely targets hypotheses of interest.

In conclusion, as we noted in our first article, panel data models are not a panacea for unconditional causal inference, just as randomized controlled trials are not (Cartwright & Hardie, 2012). From a practical perspective, causal inference under any approach is meant to allow using past observations to plan and execute actions such as interventions or policy changes that are designed to work for a set of specific purposes (Heckman, 2003, 2005). This practical orientation should be kept in mind when both accounting for trends with unit effects and interpreting AR, MA, CL, and CLMA terms along with their Granger-Sims and impulse-response counterparts. No empirical method secures the future against uncertainty, but panel models like the GCLM can be a useful complement to other methods for making plans and acting in the face of uncertainty.

Declaration of Conflicting Interests

The author(s) declared no potential conflicts of interest with respect to the research, authorship, and/or publication of this article.

Funding

The author(s) disclosed receipt of the following financial support for the research, authorship, and/or publication of this article: This research was supported by Australian Research Council's Future Fellowship scheme (Project FT140100629).

Supplemental Material

Supplemental material for this article is available online at http://journals.sagepub.com/doi/suppl/10.1177/1094428119847280 and https://doi.org/10.26188/5c9ec7295fefd

References

Ahn, S. C., Lee, Y. H., & Schmidt, P. (2001). GMM estimation of linear panel data models with time-varying individual effects. *Journal of Econometrics*, *101*(2), 219-255. doi:10.1016/S0304-4076(00)00083-X

Ahn, S. C., Lee, Y. H., & Schmidt, P. (2013). Panel data models with multiple time-varying individual effects. *Journal of Econometrics*, *174*(1), 1-14. doi:10.1016/j.jeconom.2012.12.002

Allen, P. G., & Fildes, R. (2001). Econometric forecasting. In J. S. Armstrong (Ed.), *Principles of forecasting: A handbook for researchers and practitioners* (pp. 303-362). Norwell, MA: Kluwer.

Allison, P. D. (2009). *Fixed effects regression models*. Thousand Oaks, CA: Sage.

Allison, P. D., Williams, R., & Moral-Benito, E. (2017). Maximum likelihood for cross-lagged panel models with fixed effects. *Socius*, *3*, 1-17. doi:10.1177/2378023117710578

Alvarez, J., & Arellano, M. (2003). The time series and cross-section asymptotics of dynamic panel data estimators. *Econometrica*, *71*(4), 1121-1159. doi:10.1111/1468-0262.00441

Arellano, M. (2003). *Panel data econometrics*. Oxford, UK: Oxford University Press.

Arellano, M., & Bond, S. (1991). Some tests of specification for panel data: Monte Carlo evidence and an application to employment equations. *Review of Economic Studies*, *58*(2), 277-297. doi:10.2307/2297968

Arellano, M., & Bover, O. (1995). Another look at the instrumental variable estimation of error-components models. *Journal of Econometrics*, *68*(1), 29-51. doi:10.1016/0304-4076(94)01642-D

Armstrong, J. S., Green, K. C., & Graefe, A. (2015). Golden rule of forecasting: Be conservative. *Journal of Business Research*, *68*(8), 1717-1731. doi:10.1016/j.jbusres.2015.03.031

Asparouhov, T., Hamaker, E. L., & Muthén, B. (2018). Dynamic structural equation models. *Structural Equation Modeling*, *25*, 359-388. doi:10.1080/10705511.2017.1406803

Bagozzi, R. P., & Edwards, J. R. (1998). A general approach for representing constructs in organizational research. *Organizational Research Methods*, *1*(1), 45-87. doi:10.1177/109442819800100104

Bai, J. (2009). Panel data models with interactive fixed effects. *Econometrica*, *77*(4), 1229-1279. doi:10.3982/ECTA6135

Bai, J. (2013). *Likelihood approach to dynamic panel models with interactive effects* (MRPA Paper No. 50267). Retrieved from http://mrpa.ub.uni-muenchen.de/50267/. doi:10.2139/ssrn.2332992

Baltagi, B. H. (2013a). Dynamic panel data models. In N. Hashimzade & M. Thornton (Eds.), *Handbook of research methods and applications on empirical macroeconomics* (pp. 229-248). Cheltenham, UK: Edward Elgar.

Baltagi, B. (2013b). *Econometric analysis of panel data*. New York, NY: John Wiley.

Baltes, P. B., Reese, H. W., & Nesselroade, J. R. (1988). *Life span developmental psychology: Introduction to research methods*. Hillsdale, NJ: Lawrence Erlbaum.

Barkema, H. G., & Schijven, M. (2008). Toward unlocking the full potential of acquisitions: The role of organizational restructuring. *Academy of Management Journal*, *51*(4), 696-722. doi:10.5465/amr.2008.33665204

Beal, D. J. (2015). ESM 2.0: State of the art and future potential of experience sampling methods in organizational research. *Annual Review of Organizational Psychology and Organizational Behavior*, *2*(1), 383-407. doi:10.1146/annurev-orgpsych-032414-111335

Beal, D. J., Trougakos, J. P., Weiss, H. M., & Green, S. G. (2006). Episodic processes in emotional labor: Perceptions of affective delivery and regulation strategies. *Journal of Applied Psychology*, *91*(5), 1053-1065.

Beal, D. J., & Weiss, H. M. (2003). Methods of ecological momentary assessment in organizational research. *Organizational Research Methods*, *6*(4), 440-464. doi:10.1177/1094428103257361

Bloom, M. (1999). The performance effects of pay dispersion on individuals and organizations. *Academy of Management Journal*, *42*(1), 25-40. doi:10.5465/256872

Blundell, R., & Bond, S. (1998). Initial conditions and moment restrictions in dynamic panel data models. *Journal of Econometrics*, *87*(1), 115-143. doi:10.1016/S0304-4076(98)00009-8

Bolger, N., & Laurenceau, J. P. (2013). *Intensive longitudinal methods: An introduction to diary and experience sampling research*. New York, NY: Guilford.

Bollen, K. A., & Brand, J. E. (2010). A general panel model with random and fixed effects: A structural equations approach. *Social Forces*, *89*(1), 1-34. doi:10.1353/sof.2010.0072

Bollen, K. A., & Curran, P. J. (2004). Autoregressive latent trajectory (ALT) models a synthesis of two traditions. *Sociological Methods & Research*, *32*(3), 336-383. doi:10.1177/0049124103260222

Bollen, K. A., & Curran, P. J. (2006). *Latent curve models: A structural equation perspective*. New York, NY: John Wiley.

Bollen, K. A., & Zimmer, C. R. (2010). An overview of the autoregressive latent trajectory (ALT) model. In K. van Montfort, J. H. L. Oud, & A. Satorra (Eds.), *Longitudinal research with latent variables* (pp. 153-176). Berlin, Germany: Springer-Verlag.

Bond, S. R. (2002). Dynamic panel data models: A guide to micro data methods and practice. *Portuguese Economic Journal*, *1*(2), 141-162. doi:10.1007/s10258-002-0009-9

Bono, J. E., Foldes, H. J., Vinson, G., & Muros, J. P. (2007). Workplace emotions: The role of supervision and leadership. *Journal of Applied Psychology*, *92*(5), 1357-1367.

Boumahdi, R., & Thomas, A. (2008). Endogenous regressors and correlated effects. In L. Mátyás & P. Sevestre (Eds.), *The econometrics of panel data: Fundamentals and recent developments in theory and practice* (pp. 89-112). Berlin, Germany: Springer-Verlag.

Box, G. E. P., Jenkins, G. M., & Reinsel, G. C. (2008). *Time series analysis: Forecasting and control* (4th ed.). New York, NY: John Wiley.

Braun, M. T., Kuljanin, G., & DeShon, R. P. (2013). Spurious results in the analysis of longitudinal data in organizational research. *Organizational Research Methods*, *16*(2), 302-330. doi:10.1177/1094428112469668

Bun, M., & Sarafidis, V. (2015). Dynamic panel data models. In B. Baltagi (Ed.), *Oxford handbook of panel data* (pp. 76-110). Oxford, UK: Oxford University Press.

Cartwright, N., & Hardie, J. (2012). *Evidence-based policy: A practical guide to doing it better*. Oxford, UK: Oxford University Press.

Chow, S.-M., Ho, M.-h. R., Hamaker, E. L., & Dolan, C. V. (2010). Equivalence and differences between structural equation modeling and state-space modeling techniques. *Structural Equation Modeling*, *17*, 303-332. doi:10.1080/10705511003661553

Clark, A. E., Frijters, P., & Shields, M. A. (2008). Relative income, happiness, and utility: An explanation for the Easterlin paradox and other puzzles. *Journal of Economic Literature*, *46*(1), 95-144. doi:10.1257/jel.46.1.95

Cole, D. A., & Maxwell, S. E. (2003). Testing mediational models with longitudinal data: Questions and tips in the use of structural equation modeling. *Journal of Abnormal Psychology*, *112*(4), 558-577.

Curran, P. J. (2003). Have multilevel models been structural equation models all along? *Multivariate Behavioral Research*, *38*(4), 529-569. doi:10.1207/s15327906mbr3804_5

Curran, P. J., & Bauer, D. J. (2011). The disaggregation of within-person and between-person effects in longitudinal models of change. *Annual Review of Psychology*, *62*, 583-619. doi:10.1146/annurev.psych.093008.100356

Curran, P. J., & Bollen, K. A. (2001). The best of both worlds: Combining autoregressive and latent curve models. In L. Collins & A. G. Sayer (Eds.), *New methods for the analysis of change* (pp. 107-135). Washington, DC: American Psychological Association.

Curran, P. J., Lee, T., Howard, A. L., Lane, S., & MacCallum, R. A. (2012). Disaggregating within-person and between-person effects in multilevel and structural equation growth models. In J. R. Harring & G. R. Hancock (Eds.), *Advances in longitudinal methods in the social and behavioral sciences* (pp. 217-253). Charlotte, NC: Information Age.

Dalal, R. S., Lam, H., Weiss, H. M., Welch, E. R., & Hulin, C. L. (2009). A within-person approach to work behavior and performance: Concurrent and lagged citizenship-counterproductivity associations, and dynamic relationships with affect and overall job performance. *Academy of Management Journal*, *52*(5), 1051-1066. doi:10.5465/amj.2009.44636148

Davidson, D. (1986). A coherence theory of knowledge and truth. In E. LePore (Ed.), *Truth and interpretation* (pp. 307-319). Oxford, UK: Blackwell.

Deaton, A. (2003). Health, inequality, and economic development. *Journal of Economic Literature*, *41*(1), 113-158. doi:0.1257/002205103321544710

Diener, E., & Lucas, R. E. (1999). Personality and subjective well-being. In D. Kahneman, E. Diener, & N. Schwarz (Eds.), *Well-being: Foundations of hedonic psychology* (pp. 213-229). New York, NY: Sage.

Diener, E., Tay, L., & Oishi, S. (2013). Rising income and the subjective well-being of nations. *Journal of Personality and Social Psychology*, *104*(2), 267-276.

Duckworth, A. L., Tsukayama, E., & May, H. (2010). Establishing causality using longitudinal hierarchical linear modeling: An illustration predicting achievement from self-control. *Social Psychological and Personality Science*, *1*(4), 311-317. doi:10.1177/1948550609359707

du Toit, S. H. C., & Browne, M. W. (2001). The covariance structure of a vector ARMA time series. In R. Cudeck, S. Du Toit, & D. Sörbom (Eds.), *Structural equation modeling: Present and future. A festschrift in honor of Karl Jöreskog* (pp. 279-314). Chicago, IL: Scientific Software International.

du Toit, S. H. C., & Browne, M. W. (2007). Structural equation modeling of multivariate time series. *Multivariate Behavioral Research*, *42*(1), 67-101. doi:10.1080/00273170701340953

Eby, L. T., Butts, M. M., Hoffman, B. J., & Sauer, J. B. (2015). Cross-lagged relations between mentoring received from supervisors and employee OCBs: Disentangling causal direction and identifying boundary conditions. *Journal of Applied Psychology*, *100*(4), 1275-1285. doi:10.1037/a0038628

Edwards, J. R. (2011). The fallacy of formative measurement. *Organizational Research Methods*, *14*(2), 370-388. doi:10.1177/1094428110378369

Enders, C. K., & Tofighi, D. (2007). Centering predictor variables in cross-sectional multilevel models: A new look at an old issue. *Psychological Methods*, *12*(2), 121-138. doi:10.1037/1082-989X.12.2.121

Fisher, C. D., & Noble, C. S. (2004). A within-person examination of correlates of performance and emotions while working. *Human Performance*, *17*(2), 145-168. doi:10.1207/s15327043hup1702_2

Foster, E. M. (2010). Causal inference and developmental psychology. *Developmental Psychology*, *46*(6), 1454-1480.

George, G. (2005). Slack resources and the performance of privately held firms. *Academy of Management Journal*, *48*(4), 661-676. doi:10.5465/amj.2005.17843944

Geweke, J. F. (1982). Measurement of linear dependence and feedback between multiple time series. *Journal of the American Statistical Association*, *77*(378), 304-324. doi:10.1080/01621459.1982.10477803

Gielnik, M. M., Spitzmuller, M., Schmitt, A., Klemann, D. K., & Frese, M. (2015). "I put in effort, therefore I am passionate": Investigating the path from effort to passion in entrepreneurship. *Academy of Management Journal*, *58*(4), 1012-1031. doi:10.5465/amj.2011.0727

Goldstein, A. (2012). Revenge of the managers labor cost-cutting and the paradoxical resurgence of managerialism in the shareholder value era, 1984 to 2001. *American Sociological Review*, *77*(2), 268-294. doi:10.1177/0003122412440093

Gollob, H. F., & Reichardt, C. S. (1987). Taking account of time lags in causal models. *Child Development*, *58*, 80-92.

Granger, C. W. J. (1969). Investigating causal relations by econometric models and cross-spectral method. *Econometrica*, *3*, 424-438. doi:10.2307/1912791

Granger, C. W. J. (1980). Testing for causality, a personal viewpoint. *Journal of Economic Dynamics and Control*, *2*, 329-352. doi:10.1016/0165-1889(80)90069-X

Green, K. C., & Armstrong, J. S. (2015). Simple versus complex forecasting: The evidence. *Journal of Business Research*, *68*(8), 1678-1685. doi:10.1016/j.jbusres.2015.03.026

Griffin, M. A. (1997). Interaction between individuals and situations: Using HLM procedures to estimate reciprocal relationships. *Journal of Management*, *23*(6), 759-773. doi:10.1177/014920639702300604

Gulati, R. (1995). Social structure and alliance formation patterns: A longitudinal analysis. *Administrative Science Quarterly*, *40*, 619-652. doi:10.2307/2393756

Halaby, C. N. (2004). Panel models in sociological research: Theory into practice. *Annual Review of Sociology*, *30*, 507-544. doi:10.1146/annurev.soc.30.012703.110629

Hamaker, E. L. (2005). Conditions for the equivalence of the autoregressive latent trajectory model and a latent growth curve model with autoregressive disturbances. *Sociological Methods & Research*, *33*, 404-416. doi:10.1177/0049124104270220

Hamaker, E. L., & Dolan, C. V. (2009). Idiographic data analysis: Quantitative methods—from simple to advanced. In J. Valsiner, P. C. M. Molenaar, M. C. D. P. Lyra, & N. Chaudhary (Eds.), *Dynamic process methodology in the social and developmental sciences* (pp. 191-216). New York, NY: Springer.

Hamaker, E. L., Dolan, C. V., & Molenaar, P. C. M. (2002). On the nature of SEM estimates of ARMA parameters. *Structural Equation Modeling*, *9*, 347-368. doi:10.1207/S15328007SEM0903_3

Hamaker, E. L., & Grasman, R. P. (2015). To center or not to center? Investigating inertia with a multilevel autoregressive model. *Frontiers in Psychology*, *5*, 1492. doi:10.3389/fpsyg.2014.01492

Hamaker, E. L., Kuiper, R. M., & Grasman, R. P. (2015). A critique of the cross-lagged panel model. *Psychological Methods*, *20*(1), 102-116. doi:10.1037/a0038889

Hamaker, E. L., Nesselroade, J. R., & Molenaar, P. C. (2007). The integrated trait–state model. *Journal of Research in Personality*, *41*(2), 295-315. doi:10.1016/j.jrp.2006.04.003

Harvey, A. C. (1997). Trends, cycles and autoregressions. *Economic Journal*, *107*(444), 192-201.

Heckman, J. (1991). Identifying the hand of past: Distinguishing state dependence from heterogeneity. *American Economic Review*, *81*(2), 75-79.

Heckman, J. (2003). Conditioning, causality and policy analysis. *Journal of Econometrics*, *112*(1), 73-78.

Heckman, J. J. (2005). Rejoinder: Response to Sobel. *Sociological Methodology*, *35*(1), 135-162. doi:10.1111/j.0081-1750.2006.00166.x

Hoffman, L. (2015). *Longitudinal analysis: Modeling within-person fluctuations and change*. New York, NY: Routledge.

Hoffman, L., & Stawski, R. S. (2009). Persons as contexts: Evaluating between-person and within-person effects in longitudinal analysis. *Research in Human Development*, *6*(2-3), 97-120. doi:10.1080/15427600902911189

Hofmann, D. A. (1997). An overview of the logic and rationale of hierarchical linear models. *Journal of Management*, *23*(6), 723-744. doi:10.1177/014920639702300602

Holtz-Eakin, D., Newey, W., & Rosen, R. (1988). Estimating vector autoregressions with panel data. *Econometrica*, *56*, 1371-1395.

Hooker, R. H. (1905). On the correlation of successive observations illustrated by corn-prices. *Journal of the Royal Statistical Society*, *68*(4), 696-703. doi:10.2307/2339422

Hsiao, C. (2014). *Analysis of panel data* (3rd ed.). Cambridge, UK: Cambridge University Press.

Hsiao, C., Pesaran, M. H., & Tahmiscioglu, A. K. (2002). Maximum likelihood estimation of fixed effects dynamic panel data models covering short time periods. *Journal of Econometrics*, *109*(1), 107-150. doi:10.1016/S0304-4076(01)00143-9

Ilies, R., Johnson, M. D., Judge, T. A., & Keeney, J. (2011). A within-individual study of interpersonal conflict as a work stressor: Dispositional and situational moderators. *Journal of Organizational Behavior*, *32*(1), 44-64. doi:10.1002/job.677

Ilies, R., Scott, B. A., & Judge, T. A. (2006). The interactive effects of personal traits and experienced states on intraindividual patterns of citizenship behavior. *Academy of Management Journal*, *49*(3), 561-575. doi:10.5465/amj.2006.21794672

Jongerling, J., Laurenceau, J. P., & Hamaker, E. L. (2015). A multilevel AR(1) model: Allowing for inter-individual differences in trait-scores, inertia, and innovation variance. *Multivariate Behavioral Research*, *50*(3), 334-349. doi:10.1080/00273171.2014.1003772

Judge, T. A., & Ilies, R. (2004). Affect and job satisfaction: A study of their relationship at work and at home. *Journal of Applied Psychology*, *89*(4), 661-673.

Judge, T. A., Scott, B. A., & Ilies, R. (2006). Hostility, job attitudes, and workplace deviance: Test of a multilevel model. *Journal of Applied Psychology*, *91*(1), 126-138.

Judson, R. A., & Owen, A. L. (1999). Estimating dynamic panel data models: A guide for macroeconomists. *Economics Letters*, *65*(1), 9-15.

Kling, G., Harvey, C., & Maclean, M. (2017). Establishing causal order in longitudinal studies combining binary and continuous dependent variables. *Organizational Research Methods*, *20*(4), 770-799. doi:10.1177/1094428115618760

Kuljanin, G., Braun, M. T., & DeShon, R. P. (2011). A cautionary note on modeling growth trends in longitudinal data. *Psychological Methods*, *16*(3), 249-264.

Lehrer, K. (2000). *Theory of knowledge*. New York, NY: Routledge.

Little, T. D. (2013). *Longitudinal structural equation modeling*. New York, NY: Guilford.

Locke, K., & Golden-Biddle, K. (1997). Constructing opportunities for contribution: Structuring intertextual coherence and "problematizing" in organizational studies. *Academy of Management Journal*, *40*(5), 1023-1062. doi:10.5465/256926

Maxwell, S. E., & Cole, D. A. (2007). Bias in cross-sectional analyses of longitudinal mediation. *Psychological Methods*, *12*(1), 23-44. doi:10.1037/1082-989X.12.1.23

Maxwell, S. E., Cole, D. A, & Mitchell, M. A. (2011). Bias in cross-sectional analyses of longitudinal mediation: Partial and complete mediation under an autoregressive model. *Multivariate Behavioral Research*, *46*(5), 816-841. doi:10.1080/00273171.2011.606716

Maynard, M. T., Luciano, M. M., D'Innocenzo, L., Mathieu, J. E., & Dean, M. D. (2014). Modeling time-lagged reciprocal psychological empowerment–performance relationships. *Journal of Applied Psychology*, *99*(6), 1244-1253.

McArdle, J. J. (2001). A latent difference score approach to longitudinal dynamic structural analysis. In R. Cudeck, S. Du Toit, & D. Sörbom (Eds.), *Structural equation modeling: Present and future* (pp. 342-380). Lincolnwood, IL: Scientific Software International.

McArdle, J. J. (2009). Latent variable modeling of differences and changes with longitudinal data. *Annual Review of Psychology*, *60*, 577-605.

McArdle, J. J., & Hamagami, F. (2001). Latent difference score structural models for linear dynamic analyses with incomplete longitudinal data. In L. Collins & A. Sayer (Eds.), *New methods for the analysis of change* (pp. 139-175). Washington, DC: APA Press.

McArdle, J. J., & Hamagami, F. (2004). Methods for dynamic change hypotheses. In K. van Montfort, J. H. L. Oud, & A. Satorra (Eds.), *Recent developments on structural equation models* (pp. 295-335). Dordrecht, Netherlands: Kluwer.

McArdle, J. J., & Nesselroade, J. R. (2003). Growth curve analysis in contemporary psychological research. In J. Schinka & W. Velicer (Eds.), *Comprehensive handbook of psychology* (Vol. *2*, pp. 447-480). New York, NY: Pergamon.

McArdle, J. J., & Nesselroade, J. R. (2014). *Longitudinal data analysis using structural equation models*. Washington, DC: American Psychological Association.

Meier, L. L., & Spector, P. E. (2013). Reciprocal effects of work stressors and counterproductive work behavior: A five-wave longitudinal study. *Journal of Applied Psychology*, *98*(3), 529-539. doi:10.1037/a0031732

Moral-Benito, E. (2013). Likelihood-based estimation of dynamic panels with predetermined regressors. *Journal of Business & Economic Statistics*, *31*(4), 451-472. doi:10.1080/07350015.2013.818003

Morgan, S. L., & Winship, C. (2014). *Counterfactuals and causal inference*. Cambridge, UK: Cambridge University Press.

Muthén, B., & Asparouhov, T. (2012). Bayesian structural equation modeling: A more flexible representation of substantive theory. *Psychological Methods*, *17*(3), 313-335.

Nauges, C., & Thomas, A. (2003). Consistent estimation of dynamic panel data models with time-varying individual effects. *Annales d'Economie et de Statistique*, *70*, 53-75. doi:10.2307/20076374

Nelson, C. R., & Kang, H. (1981). Spurious periodicity in inappropriately detrended time series. *Econometrica*, *49*(3), 741-751. doi:10.2307/1911520

Nelson, C. R., & Kang, H. (1984). Pitfalls in the use of time as an explanatory variable in regression. *Journal of Business & Economic Statistics*, *2*, 73-82. doi:10.1080/07350015.1984.10509371

Nelson, C. R., & Plosser, C. R. (1982). Trends and random walks in macroeconmic time series: Some evidence and implications. *Journal of Monetary Economics*, *10*, 139-162. doi:10.1016/0304-3932(82)90012-5

Nerlove, M. (1967). Experimental evidence on the estimation of dynamic economic relations from a time series of cross-sections. *Economic Studies Quarterly*, *18*, 42-74. doi:10.11398/economics1950.18.3_42

Nerlove, M. (1971). Further evidence on the estimation of dynamic economic relations from a time series of cross sections. *Econometrica*, *39*(2), 359-387. doi:10.2307/1913350

Nerlove, M., Sevestre, P., & Balestra, P. (2008). Introduction. In L. Mátyás & P. Sevestre (Eds.), *The econometrics of panel data: Fundamentals and recent developments in theory and practice* (pp. 3-22). Berlin, Germany: Springer-Verlag.

Nesselroade, J. J., McArdle, J. J., Aggen, S. H., & Meyers, J. (2002). Dynamic factor analysis models for multivariate time series analysis. In D. M. Moskowitz & S. L. Hershberger (Eds.), *Modeling individual variability with repeated measures data: Advances and techniques* (pp. 233-266). Mahwah, NJ: Lawrence Erlbaum.

Nezlek, J. B. (2001). Multilevel random coefficient analyses of event-and interval-contingent data in social and personality psychology research. *Personality and Social Psychology Bulletin*, *27*(7), 771-785. doi:10.1177/0146167201277001

Nezlek, J. B. (2008). An introduction to multilevel modeling for social and personality psychology. *Social and Personality Psychology Compass*, *2*(2), 842-860. doi:10.1111/j.1751-9004.2007.00059.x

Nezlek, J. B. (2011). *Multilevel modeling for social and personality psychology*. London, UK: Sage.

Nezlek, J. B. (2012a). *Diary methods for social and personality psychology*. London, UK: Sage.

Nezlek, J. B. (2012b). Multilevel modeling of diary-style data. In M. R. Mehl & T. S. Conner (Eds.), *Handbook of research methods for studying daily life* (pp. 357-383). New York, NY: Guilford.

Nickell, S. (1981). Biases in dynamic models with fixed effects. *Econometrica*, *49*, 1417-1426. doi:10.2307/1911408

Nohe, C., Meier, L. L., Sonntag, K., & Michel, A. (2015). The chicken or the egg? A meta-analysis of panel studies of the relationship between work–family conflict and strain. *Journal of Applied Psychology*, *100*(2), 522-536.

Piening, E. P., Baluch, A. M., & Salge, T. O. (2013). The relationship between employees' perceptions of human resource systems and organizational performance: Examining mediating mechanisms and temporal dynamics. *Journal of Applied Psychology*, *98*(6), 926-947.

Pierce, D. A., & Haugh, L. D. (1977). Causality in temporal systems: Characterization and a survey. *Journal of Econometrics*, *5*(3), 265-293. doi:10.1016/0304-4076(77)90039-2

Pitariu, A., & Ployhart, R. E. (2010). Explaining change: Theorizing and testing dynamic mediated longitudinal relationships. *Journal of Management*, *36*(2), 405-429. doi:10.1177/0149206308331096

Quine, W., & Ullian, J. (1970). *The web of belief*. New York, NY: Random House.

Raudenbush, S. W. (2001). Comparing personal trajectories and drawing causal inferences from longitudinal data. *Annual Review of Psychology*, *52*(1), 501-525. doi:0.1146/annurev.psych.52.1.501

Raudenbush, S. W., & Bryk, A. S. (2002). *Hierarchical linear models: Applications and data analysis methods (Vol. 1)*. Thousand Oaks, CA: Sage.

Riketta, M. (2008). The causal relation between job attitudes and performance: A meta-analysis of panel studies. *Journal of Applied Psychology*, *93*(2), 472-481. doi:10.1037/0021-9010.93.2.472

Roodman, D. (2009a). How to do xtabond2: An introduction to difference and system GMM in Stata. *Stata Journal*, *9*(1), 86-136. doi:10.2139/ssrn.982943

Roodman, D. (2009b). A note on the theme of too many instruments. *Oxford Bulletin of Economics and Statistics*, *71*(1), 135-158. doi:10.1111/j.1468-0084.2008.00542.x

Rovine, M. J., & Walls, T. A. (2006). Multilevel autoregressive modeling of interindividual differences in the stability of a process. In T. A. Walls & J. L. Schafer (Eds.), *Models for intensive longitudinal data* (pp. 124-147). New York, NY: Oxford University Press.

Schonfeld, I. S., & Rindskopf, D. (2007). Hierarchical linear modeling in organizational research: Longitudinal data outside the context of growth modeling. *Organizational Research Methods*, *10*(3), 417-429. doi:10.1177/1094428107300229

Sevestre, P., & Trognon, A. (1985). A note on autoregressive error components models. *Journal of Econometrics*, *28*(2), 231-245. doi:10.1016/0304-4076(85)90122-8

Shepherd, D. A., & Sutcliffe, K. M. (2011). Inductive top-down theorizing: A source of new theories of organization. *Academy of Management Review*, *36*(2), 361-380. doi:10.5465/amr.2009.0157

Sims, C. A. (1996). *Inference for multivariate time series models with trend*. Princeton, NJ: Princeton University Press.

Sims, C. (2000). Using a likelihood perspective to sharpen econometrics discourse: Three examples. *Journal of Econometrics*, *95*(2), 443-462. doi:10.1016/S0304-4076(99)00046-9

Skrondal, A., & Rabe-Hesketh, S. (2004). *Generalized latent variable modeling: Multilevel, longitudinal, and structural equation models*. Boca Raton, FL: Chapman & Hall/CRC.

Skrondal, A., & Rabe-Hesketh, S. (2008). Multilevel and related models for longitudinal data. In J. de Leeuw & E. Meijer (Eds.), *Handbook of multilevel analysis* (pp. 275-299). New York, NY: Springer.

Stock, J. H., & Watson, M. W. (1988). Variable trends in economic time series. *Journal of Economic Perspectives*, *2*(3), 147-174. doi:10.1257/jep.2.3.147

Stock, J. H., & Watson, M. W. (2003). *Introduction to econometrics* (Vol. *104*). Boston, MA: Addison-Wesley.

Teachman, J., Duncan, G. J., Yeung, W. J., & Levy, D. (2001). Covariance structure models for fixed and random effects. *Sociological Methods & Research*, *30*(2), 271-288. doi:10.1177/0049124101030002005

Tintner, G. (1940). *The variate difference method*. Bloomington, IN: Principia Press.

Usami, S., Hayes, T., & McArdle, J. J. (2015). On the mathematical relationship between latent change score and autoregressive cross-lagged factor approaches: Cautions for inferring causal relationship between variables. *Multivariate Behavioral Research*, *50*(6), 676-687. doi:10.1080/00273171.2015.1079696

Uy, M. A., Foo, M. D., & Aguinis, H. (2010). Using experience sampling methodology to advance entrepreneurship theory and research. *Organizational Research Methods*, *13*(1), 31-54. doi:10.1177/1094428109334977

Vaisey, S., & Miles, A. (2017). What you can—and can't—do with three-wave panel data. *Sociological Methods & Research*, *46*(1), 44-67. doi:10.1177/0049124114547769

Vancouver, J. B., & Kendall, L. N. (2006). When self-efficacy negatively relates to motivation and performance in a learning context. *Journal of Applied Psychology*, *91*(5), 1146-1153.

Vancouver, J. B., Thompson, C. M., Tischner, E. C., & Putka, D. J. (2002). Two studies examining the negative effect of self-efficacy on performance. *Journal of Applied Psychology*, *87*(3), 506-516.

Vancouver, J. B., Thompson, C. M., & Williams, A. A. (2001). The changing signs in the relationships among self-efficacy, personal goals, and performance. *Journal of Applied Psychology*, *86*(4), 605-620.

Van Iddekinge, C. H., Ferris, G. R., Perrewé, P. L., Perryman, A. A., Blass, F. R., & Heetderks, T. D. (2009). Effects of selection and training on unit-level performance over time: A latent growth modeling approach. *Journal of Applied Psychology*, *94*(4), 829-843. doi:10.1037/a0014453

Voelkle, M. C. (2008). Reconsidering the use of autoregressive latent trajectory (ALT) models. *Multivariate Behavioral Research*, *43*, 564-591. doi:10.1080/00273170802490665

Voelkle, M. C., & Oud, J. H. L. (2015). Relating latent change score and continuous time models. *Structural Equation Modeling*, *22*(3), 366-381. doi:10.1080/10705511.2014.935918

Walls, T. A., Jung, H., & Schwartz, J. E. (2006). Multilevel models for intensive longitudinal data. In T. A. Walls & J. L. Schafer (Eds.), *Models for intensive longitudinal data* (pp. 3-37). New York, NY: Oxford University Press.

Wang, L., & Maxwell, S. E. (2015). On disaggregating between-person and within-person effects with longitudinal data using multilevel models. *Psychological Methods*, *20*(1), 63-83. doi:10.1037/met0000030

Watson, M. W. (1986). Univariate detrending methods with stochastic trends. *Journal of Monetary Economics*, *18*, 49-75.

Williams, R., Allison, P. D., & Moral-Benito, E. (2018). Linear dynamic panel-data estimation using maximum likelihood and structural equation modeling. *Stata Journal*, *18*, 293-326.

Yeo, G. B., & Neal, A. (2006). An examination of the dynamic relationship between self-efficacy and performance across levels of analysis and levels of specificity. *Journal of Applied Psychology*, *91*(5), 1088-1101.

Yule, G. U. (1921). On the time-correlation problem, with special reference to the variate-difference correlation method. *Journal of the Royal Statistical Society*, *84*, 497-526. doi:10.2307/2341101

Yule, G. U. (1926). Why do we sometimes get nonsense correlations between time series? A study in sampling and the nature of time series. *Journal of the Royal Statistical Society*, *89*(1), 1-64. doi:10.2307/2341482

Author Biographies

Michael J. Zyphur is an associate professor of Management at the University of Melbourne. His interests lie in quantitative research methods, including their history and philosophy, as well as the study of human wellbeing and ethics.

Manuel C. Voelkle is a professor for psychological research methods at the Humboldt-Universität zu Berlin and an adjunct researcher at the Max Planck Institute for Human Development. His research interests revolve around the design and analysis of multivariate empirical studies with an emphasis on the use of structural equation models for the analysis of longitudinal data.

Louis Tay is an associate professor in Industrial-Organizational Psychology at Purdue University. His research interests are in well-being, vocational interests, measurement, taxonometrics, latent class modeling, and data science.

Paul D. Allison is a sociologist and professor emeritus of the University of Pennsylvania where he taught graduate courses in methods and statistics for more than 35 years. He is widely recognized for his work on, and teaching of, statistical methods. His current methodological research is on the analysis of longitudinal data, especially with determining the causes and consequences of events, and on methods for handling missing data.

Kristopher J. Preacher is a professor in Quantitative Methods at Vanderbilt University. His research concerns the use and combination of structural equation modeling and multilevel modeling to model correlational and longitudinal data. Other interests include developing techniques to test mediation and moderation hypotheses, bridging the gap between substantive theory and statistical practice, and studying model evaluation and model selection in the application of multivariate methods to social science questions.

Zhen Zhang is a professor of Management and Dean's Council of 100 Distinguished Scholar in the W. P. Carey School of Business at Arizona State University. He obtained his PhD in Human Resources and Industrial Relations in 2008 from the University of Minnesota. His research focuses on leadership process and development, biological basis of work behavior, the intersection between organizational behavior and entrepreneurship, and advanced research methods.

Ellen L. Hamaker is a full professor at the Utrecht University. She received her PhD in 2004 from the University of Amsterdam and spent a year as a post doctoral fellow at the University of Virginia. Her research interests include time series analysis, longitudinal analysis, multilevel analysis, structural equation modeling, and Bayesian statistics.

Ali Shamsollahi is an assistant professor of Marketing, ESSEC Business School. His research interests revolve around inter-organizational relationships, marketing channels, and dynamic research methods suitable for the study of longitudinal data.

Dean C. Pierides is a lecturer in Business and Management at the University of Stirling and Executive Board member for the Research Committee on the Sociology of Organizations in the International Sociological Association. He was awarded a BA from the University of Pennsylvania, a DipEd, MEd and PhD from the University of Melbourne. His research is about how organizations and institutions deal with uncertainty, focusing on government agencies that are responsible for emergencies and disasters, whether, natural, financial, medical, or otherwise.

Peter Koval completed a PhD in Psychology at KU Leuven (2014), followed by a postdoctoral fellowship at the Australian Catholic University (2014-2017). He is currently a lecturer in the Melbourne School of Psychological Sciences, University of Melbourne. Peter's research focuses on understanding daily emotional functioning and dynamics and their relation with well-being and psychopathology.

Ed Diener is an alumni distinguished professor of Psychology (Emeritus) at the University of Illinois, where he has been a faculty member since 1974. He is currently a professor of psychology at the University of Utah and the University of Virginia. He joined Gallup as a Senior Scientist in 1999 and advises them on research in psychological well-being. His current research focuses on the theories and measurement of well-being; temperament and personality influences on well-being; income and well-being; and cultural influences on well-being; and how employee well-being enhances organizational performance.