BBA - Molecular and Cell Biology of Lipids 1864 (2019) 715–732

Contents lists available at ScienceDirect

BBA - Molecular and Cell Biology of Lipids

journal homepage: www.elsevier.com/locate/bbalip

Review

Gene-gene and gene-environment interactions in lipodystrophy: Lessons learned from natural PPARγ mutants

M.F. Broekema[a], D.B. Savage[b], H. Monajemi[c], E. Kalkhoven[a,*]

[a] Center for Molecular Medicine, University Medical Center Utrecht, Utrecht University, Utrecht, the Netherlands
[b] Metabolic Research Laboratories, Wellcome Trust-Medical Research Council Institute of Metabolic Science, University of Cambridge, Cambridge, United Kingdom
[c] Rijnstate Hospital, Arnhem, the Netherlands

ARTICLE INFO

Keywords:
Lipodystrophy
Adipose tissue
PPARG
Genomic and environmental context

ABSTRACT

Monogenic lipodystrophies are a heterogeneous group of rare disorders characterized by a lack of adipose tissue (AT), all of which predispose patients to the development of insulin resistance and its related metabolic sequelae. The extent of AT loss ranges from partial, as in familial partial lipodystrophy (FPLD), to a total absence of metabolically active AT in congenital generalized lipodystrophy (CGL) and is generally associated with the severity of metabolic complications. Significant genetic, allelic, phenotypic, and clinical heterogeneity exists among the lipodystrophies. Patients with FPLD3 due to mutations in the *PPARG* gene, which encodes a key transcriptional regulator of adipocyte development and function, provide a particularly striking example of this heterogeneity. We will present several gene-gene and gene-environment factors and mechanisms that are critical for adequate PPARγ expression and activity in AT and discuss how these interactions potentially contribute to the observed spectrum of FPLD3 phenotypes. Comparable mechanisms may play a role in other types of lipodystrophies too, and their elucidation may further improve our molecular understanding of AT dysfunction.

1. Introduction

Lipodystrophy syndromes are a heterogeneous group of rare metabolic disorders that are characterized by a selective deficiency of metabolically active adipose tissue (AT) occurring in the absence of nutritional deprivation or any catabolic state [1]. As a consequence, patients are predisposed to the development of insulin resistance and its related metabolic sequelae. Lipodystrophies can be acquired or have a genetic cause [2]. Acquired lipodystrophies can be associated with autoimmune diseases, including rheumatoid arthritis, Sjögren's syndrome, or medication (highly active anti-retroviral therapy in patients with HIV) and have recently been reviewed in detail elsewhere [2]. Here, we will focus on genetic lipodystrophies.

Significant genetic heterogeneity exists among genetic lipodystrophies with mutations in many different genes. In addition to the genetic heterogeneity, different mutations within the same gene can have different phenotypic outcomes, as do gene-environment interactions. Patients with FPLD3 (FPLD3; OMIM 604367) due to mutations in the *PPARG* gene, encoding for peroxisome proliferator-activated receptor γ (PPARγ), the master regulator of adipocyte development and function, provide a particularly striking example of this heterogeneity, which occurs at the genetic, allelic, phenotypic, and clinical level. In addition, the role of PPARγ has been extensively studied in adipocyte biology and the functional consequences of the FPLD3-associated *PPARG* mutations are relatively well characterized [3]. Therefore, we consider patients with FPLD3 a particularly suitable model in which to explore the potential effects of gene-gene and gene-environment interactions on the expression and activity of PPARγ, which may help to explain the phenotypic spectrum observed in this particular genetic lipodystrophy.

In this review we will discuss how gene-gene and gene-environment interactions contribute to the onset and progression of FPLD3. Furthermore, we will provide an overview of all the FPLD3-associated *PPARG* mutations that have been reported. Although literature in this area on other types of genetic lipodystrophies is currently more sparse, we propose that comparable principles underlying gene-gene and gene-environment interactions may apply to other types of lipodystrophy as

Abbreviations: AT, adipose tissue; FPLD, familial partial lipodystrophy; CGL, congenital generalized lipodystrophy; PPARγ, peroxisome proliferator-activated receptor gamma; RXRα, retinoid x receptor alpha; PPRE, PPAR response element; TZD, thiazolidinedione; DBD, DNA binding domain; LBD, ligand binding domain; miRNA, microRNA; PTM, posttranslational modification

* Corresponding author: Center for Molecular Medicine, Department of Molecular Cancer Research, University Medical Center Utrecht, Utrecht University, Utrecht, the Netherlands.

E-mail address: e.kalkhoven@umcutrecht.nl (E. Kalkhoven).

https://doi.org/10.1016/j.bbalip.2019.02.002
Received 21 September 2018; Received in revised form 13 January 2019; Accepted 2 February 2019
Available online 08 February 2019

well. Therefore, elucidation of these principles is helpful for a complete understanding of the phenotypic spectrum of lipodystrophies.

2. Overview of genetic lipodystrophies

Most genetic lipodystrophies are single gene or monogenic disorders. Identification of the causative genes has provided unique insights into the roles of the genes/proteins involved in the (transcriptional) regulation of adipogenesis, fatty acid uptake by adipocytes, synthesis of triacylglycerol and lipid droplet formation. The two main types of inherited lipodystrophies are congenital generalized lipodystrophy (CGL) and familial partial lipodystrophy (FPLD) [1]. In addition, generalized and partial lipodystrophy can also be a main feature in very rare premature ageing multisystem disorders, including SHORT syndrome, mandibuloacral dysplasia, Werner syndrome, MDP syndrome, and Hutchinson-Gilford progeria syndrome [4–7].

Genetic lipodystrophies are often accompanied by metabolic complications resulting from ectopic lipid accumulation, including insulin resistance, type 2 diabetes mellitus (T2DM), hypertension, hypertriglyceridemia, hepatic steatosis, and increased risk of cardiovascular disease. Female patients often develop clinical features of hyperandrogenism, including hirsutism, polycystic ovaries, and sub−/infertility. The severity of the metabolic complications strongly correlates with the extent of the AT loss [1]. Besides the metabolic complications, patients diagnosed with lipodystrophy often experience a high psychological burden with low self-esteem due to the profound morphological changes, leading to reduced quality of life and social stigmatisation [8–10].

CGL, also known as Berardinelli-Seip syndrome, is an autosomal recessive disorder caused by mutations in *AGPAT2* (CGL1), *BSCL2* (CGL2), *CAV1* (CGL3) or *PTRF* (CGL4) (Fig. 1) [11–14]. In general, CGLs are characterized by a generalized lack of AT, resulting in a remarkable muscular habitus, that is already present at birth or becomes apparent during early childhood [15]. Patients with FPLD on the other hand often have a normal AT distribution at birth and throughout childhood with the lack of AT in the arms and legs typically manifesting during puberty when fat distribution and mass typically changes significantly, particularly in girls. Face, neck, and intra-abdominal regions are often spared. FPLD usually shows an autosomal dominant inheritance pattern. The genetic basis of FPLD1 will be discussed below. Mutations in the genes *LMNA* (FPLD2), *PPARG* (FPLD3), *PLIN1* (FPLD4), *CIDEC* (FPLD5), *LIPE* (FPLD6), *AKT2*, *PCYT1A* and *ADRA2A* are associated with partial lipodystrophy (Fig. 1) [16–23], though in some cases these reports are still limited to very few cases.

With a decline in DNA sequencing costs the approach in genetic testing has shifted from sequencing individual genes to selected gene panels and sequencing whole exomes and genomes. This less selective approach provides novel insights in the etiology of some subtypes of FPLD. For instance, the clinical characteristics of FPLD2 show clinical overlap with multiple symmetrical lipomatosis (MSL), a rare condition characterized by massive accumulation of AT in the upper body and gradual loss of AT in arms and legs [24,25]. *MFN2* which is mutated in MSL might therefore be considered to be a partial lipodystrophy gene too. Please note that MSL has a heterogonous genetic basis as germline variants in mitochondrial DNA have been identified in patients with MSL as well [26]. Although the genetic basis of FPLD1 is unknown, a recent study suggested a polygenetic origin, rather than a monogenic origin for FPLD1 [27]. Patients with FPLD1 are enriched for common variants in 53 gene regulatory regions associated with insulin resistance and limited AT expandability in the extremities [27].

In general, the AT distribution in a particular subtype of lipodystrophy is quite characteristic [1]. However, definitive diagnosis can be challenging because of considerable heterogeneity, which occurs at four different levels: genetic, allelic, phenotypic, and clinical. Genetic heterogeneity is defined as mutations in different genes that give rise to a similar lipodystrophic phenotype (Fig. 1). Secondly, the majority of the lipodystrophy-associated genes are affected by a range of disease-causing mutations, a situation that is referred to as allelic heterogeneity. For instance, approximately 40 different lipodystrophy-associated mutations have been described so far in the AGPAT2 (CGL1; OMIM 603100) and *PPARG* (FPLD3; OMIM 604367) gene (Fig. 2). Thirdly, phenotypic heterogeneity refers to a situation where mutations in the same gene can give rise to different phenotypes ranging from more subtle disease, to partial and generalized lipodystrophy. For example, it has recently been shown that heterozygous mutations in PLIN1 do not always cause overt lipodystrophy [28]. In addition, mutations in the *PPARG* gene – a gene previously found to be associated with partial lipodystrophy – can very rarely also cause generalized lipodystrophy [29]. Vice versa, mutations in the LMNA [30,31] and CAV1 [13,32] gene have been reported in both generalized and partial genetic lipodystrophies. We recently identified a single complex AGPAT2 allele in a patient with partial lipodystrophy [33] – so far mutations in this gene were only associated with generalized lipodystrophy. This is a surprising finding, as no obvious lipodystrophy phenotype was reported so far in family members of affected patients carrying heterozygous AGPAT2 mutations, although more subtle metabolic derangements cannot be excluded [34]. Therefore, additional genetic or environmental factors may have been required to evoke lipodystrophy in cases like this. This concerns a fourth level of heterogeneity, denoted as clinical heterogeneity. Accordingly, mutations are often context-dependent: the same mutation can differentially affect the phenotype depending on variation in other genes involved in metabolic regulation, life stage, sex, and environment. In lipodystrophy, variations in environmental conditions, particularly diet, can challenge an individual's capacity to maintain AT homeostasis, resulting in enhanced expression of deleterious metabolic effects. In contrast, “favourable” conditions can mask the deleterious effects of mutations, contributing to the so-called “missing heritability”. The context-dependency of mutations leads to clinical heterogeneity and means that the same mutation in different individuals can have various clinical consequences, even among individuals from the same family. However, the gene-gene and gene-environment interactions underlying the heterogeneity in lipodystrophy are not always evident.

3. FPLD3-associated *PPARG* mutations: a model for exploring gene-gene and gene-environment interactions

The *PPARG* gene and its encoded protein, peroxisome proliferator-activated receptor γ (PPARγ), is an interesting example as this elegantly illustrates heterogeneity occurring at the genetic, allelic, phenotypic, and clinical level. In addition, the role of PPARγ has been extensively studied in adipocyte biology and the functional consequences of the FPLD3-associated *PPARG* mutations are relatively well characterized [3]. Therefore, we consider patients with FPLD3 a particularly suitable model in which to explore the effect of gene-gene and gene-environment interactions on the expression and activity of PPARγ. This idea is supported by several human and mouse studies. Firstly, patients with FPLD3 typically present after the onset of puberty. Secondly, female patients are more often and more severely affected by FPLD3 than male patients. Thirdly, titrated reduction of the *Pparg* gene expression in mice suggests that a reduction in PPARγ expression up to 50% is still sufficient to maintain a normal body composition [35]. However, a reduction in total body mass and fat mass, insulin resistance and dyslipidemia became apparent when PPARγ expression was reduced to 25% [35]. These findings in mice are supported by a more recent finding that compound heterozygous mutations in *PPARG*, a situation that is functionally equivalent to homozygosity, cause an early onset generalized loss of AT [29]. Fourthly, in the general population approximately 1:500 individuals harbors a mutation in the *PPARG* gene, which suggests that a great number of *PPARG* mutations have minor functional consequences and do not necessarily lead to overt FPLD3 [36]. In line with this, individuals from the same family, carrying the

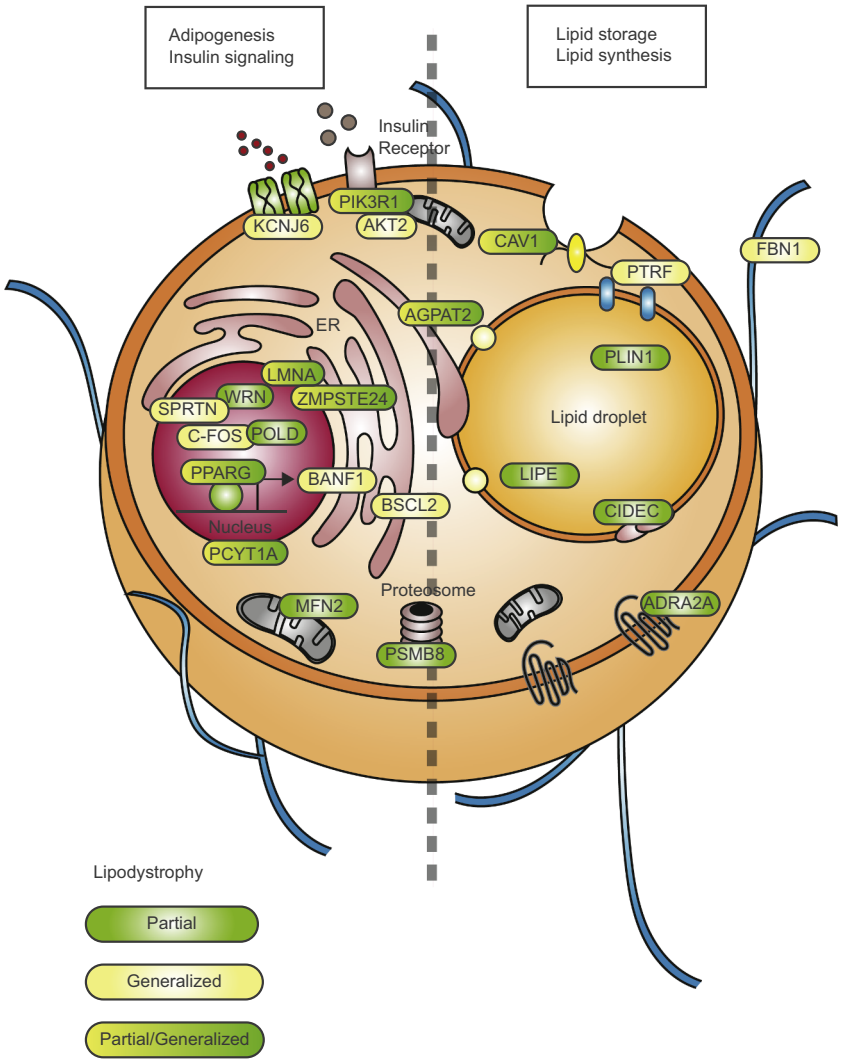

Fig. 1. Overview and localization of the gene products affected in genetic lipodystrophies. Proteins associated with partial lipodystrophy are indicated in green. Proteins associated with generalized lipodystrophy are in yellow. Gene products that have been reported in partial and generalized lipodystrophy are depicted in yellow/green. (For interpretation of the references to colour in this figure legend, the reader is referred to the web version of this article.)

heterozygous frame-shift/premature stop mutation fs186X, had normal insulin levels, whereas family members that carried an additional heterozygous frameshift/premature stop mutation in the gene encoding Protein Phosphatase 1 Regulatory Subunit 3A (PPP1R3A), implicated in glycogen synthesis, displayed severe insulin resistance [37]. In addition, carriers of the PPARγ S317C mutation, which clearly impairs PPARγ activity, only display features of hypertriglyceridemia without FPLD3 [38].

Together, these findings suggest that the expression and activity of PPARγ is subject to gene-gene and gene-environment interactions. In addition, these findings imply the existence of a certain critical 'pathogenic threshold' for PPARγ activity, with the phenotypic features of FPLD3 becoming manifest when the activity of PPARγ falls below this threshold (Fig. 3). Before discussing the gene-gene and gene-environment interactions, we first review the physiological regulation of PPARγ expression and activity in adipose tissue.

3.1. PPARγ as the master regulator of adipocyte differentiation, function, and maintenance

In the last two decades tremendous progress has been made in deciphering the transcriptional network that regulates adipogenesis [39–47], a well-orchestrated developmental process by which fibroblast-like preadipocytes differentiate into mature adipocytes. PPARγ, a transcription factor belonging to the PPAR nuclear receptor subfamily that also includes PPARα and PPARβ/δ [48], has been identified as the master regulator of adipogenesis. PPARγ is both sufficient and essential to induce adipogenesis [49]. In addition to determining adipocyte fate, PPARγ is also required for adipocyte survival by maintaining adipocyte integrity and function [50].

PPARγ is encoded by the *PPARG* gene, located on chromosome 3p25 [51]. The *PPARG* gene generates four *PPARG* splice variants (*PPARG*1–4) encoding for two protein isoforms *via* differential promoter usage and alternative splicing [52]. The PPARγ1 isoform, consisting of 477 amino acids, is broadly expressed with relatively high levels in AT, skeletal muscle, colon epithelia, and macrophages. PPARγ2 contains an additional 28 amino acids in its NH2-terminus compared to PPARγ1 [52] and is predominantly expressed in white and brown AT [53]. Both PPARγ isoforms have the intrinsic ability to promote adipogenesis [54]. However, PPARγ2 has a greater adipogenic capacity due to enhanced binding ability for coactivators and components of the mediator complex [55]. Unless otherwise specified in this review, PPARγ2 will be denoted as PPARγ and the amino acid numbering also refers to PPARγ2. Noteworthy, a third PPARγ protein isoform, denoted as PPARγΔ5, was recently reported [55]. PPARγΔ5 is endogenously expressed in adipose tissue and lacks the entire ligand

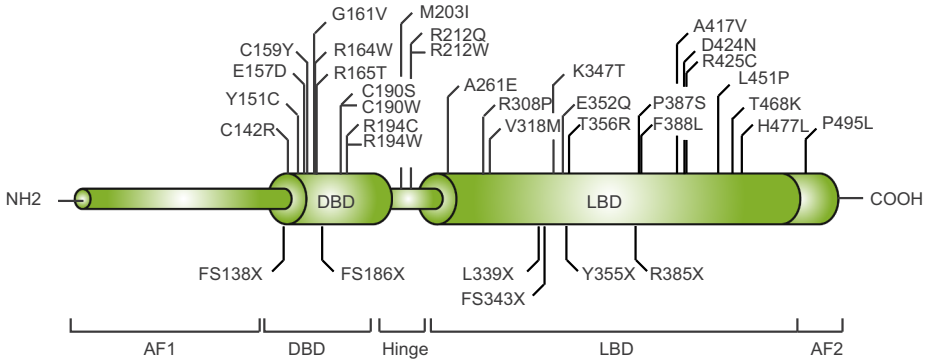

Domain	Position	Gender index patient	Age onset FPLD3/ genetic diagnosis	Number of affected family members (F/M)	Reference
Promoter					
	-14A>G	Female	13/21	2 (1/1)	[130]
DBD					
	FS138X	Female	17/37	1 (1/0)	[131]
	C142R	Female	34/41	1 (1/0)	[132]
	Y151C	Female	43/61	3 (2/1)	[133]
	Y151C	Female	15/24	1 (1/0)	[134]
	Y151C	Female	15/28	4 (3/1)	[134]
	E157D	Female	NA	15 (7/8)	[135]
	C159Y	Female	35/42	2 (2/0)	[132]
	G161V	Female	43/60	1 (1/0)	[116]
	R164W	Female	Infancy/30	2 (1/1)	[29]
	R165T	Female	22/44	2 (2/0)	[117]
	FS186X	NA	NA	7 (5/2)	[37]
	C190S	Female	26/26	3 (2/1)	[117]
	C190W	Female	19/31	1 (1/0)	[132]
	R194Q	Female	24/46	2 (NA)	[3]
	R194Q	Female	58/58	1 (1/0)	[3]
	R194W	Female	19/31	1 (1/0)	[119]
Hinge					
	M203I	Female	10/17	1 (1/0)	[3]
	R212Q	Female	NA/33	1 (1/0)	[129]
	R212W	Female	15/31	1 (1/0)	[3]
LBD					
	A261E	Female	20/22	2 (1/1)	[120]
	A261E	Female	30/39	2 (1/1)	[120]
	R308P	Female	16/16	1 (1/0)	[3,120]
	V318M	Female	16/16	1 (1/0)	[17]
	L339X	Male	40/70	2 (0/2)	[117]
	FS343X	Female	8/13	1 (1/0)	[132]
	K347T	Female	Puberty/61	5 (2/3)	[121]
	E352Q	Female	13/23	2 (2/0)	[122]
	Y355X	Female	33/45	2 (2/0)	[123]
	T356R	Female	19/19	1 (1/0)	[3]
	R385X	Female	26/35	2 (2/0)	[132]
	P387S	Female	8/13	1 (1/0)	[3]
	F388L	Female	38/46	4 (2/2)	[124]
	A417V	Female	39/40	1 (1/0)	[3]
	D424N	Female	14/14	2 (2/0)	[125]
	R425C	Female	32/64	1 (1/0)	[126]
	R425C	Female	12/36	3 (2/1)	[127]
	L451P	Female	35/x	5 (4/1)	[128]
	T468K	Female	7/15	1 (1/0)	[3]
	H477L	Female	16/26	4 (3/1)	[134]
	P495L	Female	25/55	4 (2/2)	[17]

Fig. 2. Overview of the FPLD3-associated coding *PPARG* mutations. Schematic representation of the distinct domains of PPARγ. Positions of the missense mutations are indicated above the PPARγ structure. The nonsense mutations are depicted below the PPARγ structure. The table provides an overview of the gender characteristics of the reported families with FPLD3-associated *PPARG* mutations. AF1, autonomous transactivation domain 1; DBD, DNA binding domain; LBD, ligand binding domain; AF2, autonomous transactivation domain 2.

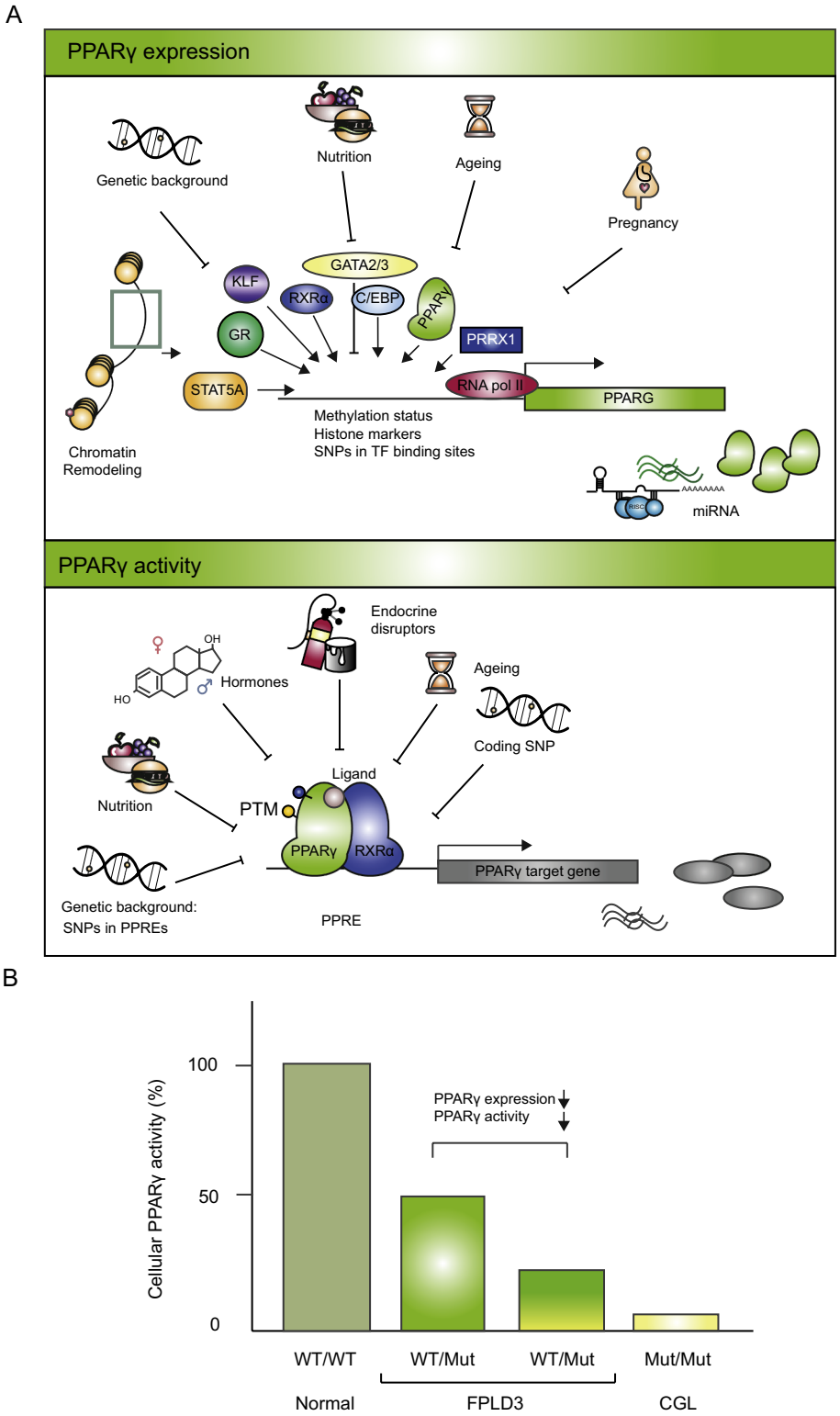

Fig. 3. Gene-gene and gene-environment interactions modulate the cellular level of PPARγ activity and contribute to variability in FPLD3. A. The expression and activity of PPARγ are subject genomic and environmental context. B. Mutations in *PPARG* impair the transcriptional activity of PPARγ to 50%. We hypothesize that additional genetic and environmental factors are required to cause FPLD3 by further impairing PPARγ activity.

binding domain (LBD) due to physiological exon 5 skipping, which potentially provides a negative feedback mechanism for regulating PPARγ activity [55].

3.2. Epigenetic and transcriptional regulation of PPARγ expression

The expression of *PPARG* in (pre-)adipocytes is tightly regulated at three different levels. Firstly, epigenetic changes and additional chromatin remodeling rearrange the chromatin to a transcriptionally accessible state. Secondly, a number of transcription factors regulate *PPARG* expression. Lastly, *PPARG* expression is regulated by microRNAs.

In murine 3 T3-L1 preadipocytes the opening of the chromatin structure at the *PPARG* locus starts within 4 h of the induction of differentiation and this early chromatin openness precedes PPARγ expression and activity [40,42]. The increased expression of PPARγ during adipogenesis also depends on combinatorial patterns of activating and repressing epigenetic modifications at the *PPARG* locus [56,57]. During the early phase of adipocyte differentiation the *PPARG* locus is enriched for activation histone marks, including acetylation of histone H3 lysine 9 (H3K9ac), acetylation of histone H3 lysine 27 (H3K27ac) and di- and trimethylation of histone H3 lysine 4 (H3K4me2/3) [56,57]. The repressive histone marker H3K27me3 is widely distributed in inactive regions adjacent to the PPARγ locus [57]. A number of regulators implicated in histone acetylation and methylation during adipogenesis, which may also be required for PPARγ expression, have been described and are reviewed elsewhere [58,59].

DNA methylation is a regulatory modification of DNA itself that has an important role in the transcriptional regulation of developmental processes, including adipogenesis. Methylation leads to chromatin compaction, which represses transcription. *In vitro* studies indicate that the *PPARG* promoter in murine 3T3L1 preadipocytes is hypermethylated and becomes progressively demethylated during adipogenesis with a concomitant increase in *PPARG* expression [60].

The dramatic changes in chromatin configuration within and immediately adjacent to the *PPARG* locus during early adipogenesis make the *PPARG* locus accessible for binding of multiple transcription factors [42]. Several transcription factors, including PPARγ that promotes its own expression [61], positively and negatively regulate PPARγ expression during adipogenesis. C/EBPs (CCAAT/enhancer binding proteins) are widely expressed transcription factors. C/EBPβ and –δ are expressed during the early phases of adipocyte differentiation [62], and induce the expression of C/EBPα and PPARγ *via* binding to functional C/EBP binding elements in the promoters of C/EBPα and PPARγ [63,64]. C/EBPα and PPARγ mutually induce each other's expression [bb031563,65–67]. PPARγ is the dominant regulator of adipogenesis [49], but CEBPα is a crucial transcription factor during terminal adipogenesis [65]. C/EBPα is required for sustained expression of PPARγ in mature adipocytes [65]. Significant overlap in binding sites of C/EBPα and PPARγ has been observed in adipocytes [40,46] and *via* these shared binding sites PPARγ and C/EBPα can synergistically activate the adipocyte metabolic gene program by facilitating each other's binding to the chromatin [44].

Besides C/EBPs the expression of PPARγ is also regulated by other transcription factors, which include several members of the Krüppel-like factor (KLF) family. KLF5 and 9 are both pro-adipogenic transcription factors and directly bind to the *PPARG* promoter [68,69]. KLF2 inhibits adipogenesis by repressing the expression of PPARγ [70]. The expression and activity of PPARγ is furthermore controlled by SREBP1, which directly binds to the *PPARG* promoter [71] and also stimulates production of endogenous PPARγ ligands [72]. The transcription factors GATA2 and 3 (GATA2/3) negatively regulate the expression of PPARγ by direct binding to its promoter [73]. In addition, GATA2/3 can both physically interact with C/EBPα- and –β [74], which may provide an alternative mechanism by which these transcription factors affect PPARγ expression.

Besides being controlled by epigenetic modifications at the *PPARG* locus and various transcription factors, the expression of PPARγ during adipogenesis is controlled by microRNAs (miRNAs). miRNAs are a class of short (16–25 nucleotides in length), non-coding, single-stranded RNAs that bind to complementary nucleotide sequences in the 3′-untranslated regions (3'UTR) of target mRNAs. miRNAs repress gene expression by mediating translation inhibition and/or decreasing the stability of mRNAs [75]. Global miRNA profiling suggests that miRNA expression is AT-depot specific [76]. The miRNAs miR-27a/b [77,78], miR-130 [79], and miR-302a [80] are negative regulators of adipogenesis by direct targeting of PPARγ. miR-143 may indirectly target PPARγ activity *via* its effect on the MAPK signalling pathway [81]. miR-143 targets MAP2K5, a kinase that phosphorylates and activates ERK5, a modulator of PPARγ activity (discussed below). Interestingly, PPARγ regulates the expression of certain miRNAs, including miR103–1 and miR-205, through PPREs present in host genes [82], allowing potential feedback mechanisms. In addition, the expression of many PPARγ interacting proteins, including binding partner RXRα, is also fine-tuned by miRNAs. The exact details of miRNA-dependent regulation of PPARγ during adipogenesis are currently unknown, as functional miRNA analysis is challenging; an individual miRNA can regulate hundreds of genes by (im)perfect complementary binding to target mRNAs and conversely one mRNA molecule can be targeted by several different miRNAs [75].

3.3. Regulation of PPARγ activity

In addition to its expression, the activity of PPARγ is also tightly regulated. Nuclear receptors are multidomain proteins that share a common secondary and tertiary architecture [83]. Similar to several other nuclear receptors, PPARγ contains an autonomous transactivation domain 1 (AF1) at its N-terminus (Fig. 2). This poorly conserved AF1 domain is implicated in the ligand-independent activation of PPARγ target genes. It harbors several sites for posttranslational modification [84]. The highly conserved DNA binding domain (DBD) contains two zinc fingers required for DNA binding. The DBD is connected to the ligand binding domain (LBD) *via* a hinge region. In PPARγ, the hinge region has a significant interaction with the DNA [85]. The LBD is essential for ligand binding, receptor heterodimerization, and ligand-dependent activation of PPARγ target genes. The LBD harbors transactivation domain 2 (AF2), a domain that serves as a platform for coregulator proteins.

Heterodimerization with the retinoid x receptor alpha (RXRα) is obligatory for PPARγ to bind DNA [86]. The heterodimer complex binds to PPAR response elements (PPREs) [48] and upon ligand binding controls the expression of gene networks implicated in adipogenesis, glucose and lipid metabolism, inflammation and maintenance of metabolic homeostasis. The PPRE consensus sequence consists of a hexameric repeat spaced by a single nucleotide (5' AGGTCA-N-AGGTCA 3′, where N can be any nucleotide). The majority of the natural PPREs in the genome represent degenerate sequences rather than the consensus sequence. PPARγ and RXRα bind with a specific orientation to the DNA, PPARγ occupies the 5′ half site of the PPRE and RXRα resides to the 3′ half site [87]. The hinge region of PPARγ interacts with 5′ nucleotides flanking the PPREs [85], which facilitates efficient binding of PPARγ/RXRα heterodimers to PPREs [88].

In ligand-free basal conditions, PPARγ/RXRα heterodimers can bind the DNA, but transcription is actively repressed by recruitment of corepressors, like NCoR (nuclear receptor corepressors) and SMRT (silencing mediator for retinoic acid and thyroid receptors). Upon ligand binding, PPARγ undergoes an allosteric conformational change that causes the release of bound corepressors and recruitment of coactivators, including SRC1 (steroid receptor coactivator 1) and CBP (CREB binding protein), which facilitate the expression of PPARγ target genes.

So far, a specific, high-affinity, endogenous ligand for PPARγ has not been identified. However, PPARγ can be modulated by a variety of

natural compounds, including polyunsaturated fatty acids [89] and eicosanoids [90,91], and oxidized lipid components [92], suggesting that PPARγ rather functions as a nutrient, or more specifically, lipid sensor [89]. The physiological relevance of these endogenous ligands is not exactly clear as they only bind with low affinity to PPARγ and their concentrations in mammalian cells are often insufficient to function as a physiological ligand [93]. Alternatively, PPARγ has a large binding pocket [94] and therefore the physiological activation of PPARγ could be the resultant of simultaneous binding of different ligands [95].

PPARγ has been identified as a *bona fide* target for thiazolidinediones (TZDs), a class of antihyperglycemic agents that include rosiglitazone, pioglitazone, and troglitazone [96]. TZDs stimulate adipogenesis [96] and cause a metabolically beneficial shift in AT distribution from visceral to subcutaneous AT depots [97–99]. Furthermore, TZDs stimulate lipid uptake and the storage of triacylglycerol in AT and favor glucose uptake in AT and muscle, which improves insulin sensitivity [100]. Despite their effectiveness in improving insulin resistance, TZDs have fallen out of favor due to the occurrence of serious side effects, including weight gain and fluid retention leading to worsening cardiac failure [101].

Reversible post-translational modifications (PTMs) provide another layer of regulation for PPARγ signalling by affecting both the transcriptional activity, stability and amount of PPARγ protein in a fast and reversible manner [84] (Fig. 4). Next to the well-established phosphorylation of serine 112 [84], these include among others phosphorylation of serine 273 [102–104], acetylation of lysines 268 and 293 [105–107], SUMOylation of lysine 107 [108–111], and *O*-GlcNAcylation of threonine 84 [112]. Although no ubiquitin acceptor lysines have been identified in PPARγ thus far, *in vitro* studies indicate that the PPARγ LBD can be conjugated to ubiquitin and exposure of fibroblasts and adipocytes to external stimuli, including treatments with TZDs [113] and interferon-γ [114,115], enhances ubiquitination and proteosomal degradation of PPARγ. Increasing evidence indicates complex relationships between different types of PTMs, which can function in a cooperative or competitive manner and thereby lead to multiple different regulatory outputs [84].

3.4. PPARγ in FPLD3

The importance of intact PPARγ signalling in adipocyte differentiation and maintenance is underscored by patients with the rare autosomal dominant inherited disorder familial partial lipodystrophy subtype 3 (FPLD3; OMIM 604367), caused by heterozygous loss-of-function mutations in the *PPARG* gene [3,17,29,37,116–135]. Despite a relative normal amount and distribution of AT throughout childhood, AT distribution in FPLD3 patients changes gradually after the onset of puberty. Patients typically lack subcutaneous AT in the extremities and gluteal region whilst preserving abdominal subcutaneous and visceral AT. In FPLD3 patients, ectopic fat accumulates within liver and skeletal muscle where it contributes to multiple metabolic disturbances including insulin resistance, non-alcoholic fatty liver disease (NAFLD), dyslipidaemia and T2DM. Affected females frequently develop features of polycystic ovarian syndrome (PCOS) including polycystic ovaries, hirsutism, and oligomenorrhea.

It is unknown why mutant PPARγ activity specifically leads to loss of limb subcutaneous AT, but not abdominal subcutaneous AT. In humans, depot differential expression of PPARγ has been reported with the highest expression in subcutaneous depots [136]. In addition, depot-selective PPARγ binding sites have been identified in primary mouse adipocytes derived from different AT depots [43].

The majority of the FPLD3-associated *PPARG* mutations are situated in either the LBD or the DBD (Fig. 2). Mutations in the LBD often result in multiple molecular defects at the level of heterodimerization, ligand-, and/or cofactor binding [137]. DBD mutants are impaired in their ability to effectively bind DNA. Recently, missense mutations have also been reported in the PPARγ hinge region implicated in DNA binding [3,129], indicating a significant role for the hinge region in regulating PPARγ activity.

Mechanisms of negative dominance and haploinsufficiency have both been suggested to explain the pathogenicity of *PPARG* mutations [138]. According to the concept of negative dominance, the transcriptional activity of the wildtype PPARγ protein is reduced due to competition with the

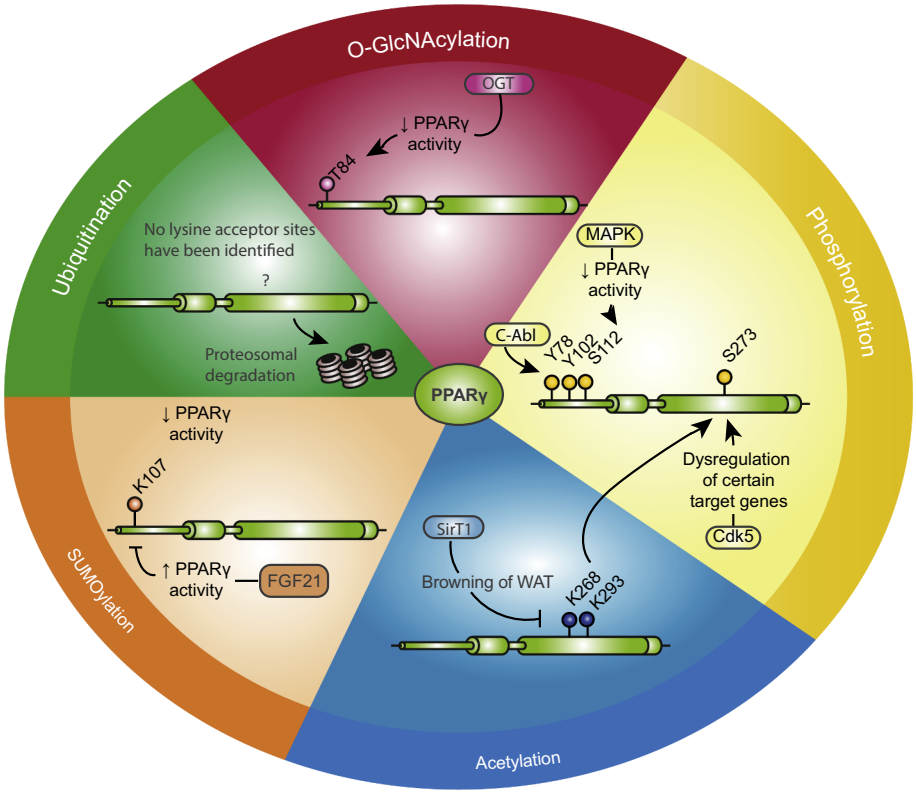

Fig. 4. Posttranslational modifications of PPARγ. The PPARγ amino acid residues where phosphorylation (yellow), SUMOylation (orange), acetylation (blue), ubiquitination (green), and O-GlcNAcylation occurs are indicated. The proteins conferring each posttranslational modification, if known, are depicted. (For interpretation of the references to colour in this figure legend, the reader is referred to the web version of this article.)

PPARγ mutant for DNA binding, ligand binding, and/or recruitment and assembly of coregulators [9,27]. As a consequence, the overall transcriptional activity of PPARγ is below 50%. While dominant negative behaviour towards PPARγ WT provides a mechanism *via* which the overall PPARγ activity falls below a critical threshold (Fig. 3B) the concept of negative dominance in FPLD3 is primarily based on cell culture models, with multiple studies showing a lack of dominant-negative behaviour in PPARγ mutants [37,118,119,123–126,128,130,131,133,139]. Haploinsufficiency, a state where the mutant PPARγ protein does not interfere in the wildtype protein activity and at least 50% of the PPARγ activity remains due to the intact *PPARG* allele, was suggested as an alternative mechanism [37,118,119,123–126,128,130,131,133,139]. However, as discussed above, several observations suggest that a 50% decrease in PPAR gamma activity is not sufficient for the onset and progression of FPLD3. Here, we suggest that gene-gene and gene-environment interactions might contribute to the phenotype. In this review we discuss several genetic and environmental factors (Fig. 3A) that in concert with heterozygous *PPARG* mutations may be critical in the development of FPLD3 by further impairing PPARγ expression and activity below a critical threshold (Fig. 3B).

4. The regulation of PPARγ expression by gene-gene and gene-environment interactions

There is growing evidence that genetic background and environmental factors, including nutrition and physiological processes such as pregnancy and ageing can modulate *PPARG* expression. For simplicity, we discuss these genetic and environmental factors separately, but these factors may well act simultaneously and are likely, to a varying extent, to be interconnected.

4.1. Gene-Gene interactions: the impact on PPARG expression

Given the importance of gene-gene interactions, *i.e.* genetic background, in FPLD1 [27], we suggest that genetic variation across the patient's genome, including rare and common single nucleotide polymorphisms (SNPs) could also contribute to the heterogeneity in FPLD3 by downregulating *PPARG* expression. The expression of PPARγ can be affected by non-coding variants as has elegantly been demonstrated in an integrative computational analysis that identified a regulatory SNP (denoted further as risk allele) in the binding site for transcription factor Paired related homeobox 1 (PRRX1), situated 6.5 kb upstream of the *PPARG* promoter [140]. Functional analysis indicated that binding of PRRX1 to the risk allele inhibits *PPARG* expression. In humans, the risk allele had adverse effects on lipid metabolism and insulin sensitivity [140]. In the *PPARG* promoter, functional non-coding SNPs associated with body weight control, lipid, insulin homeostasis have furthermore been identified in putative binding sites for MyoD [141], STAT5B [142], and GATA [143]. It is tempting to speculate that SNPs in binding sites of transcription factors, like PRRX1, STAT5B, and GATA, involved in the transcriptional regulation of PPARγ can downregulate PPARγ expression and thereby contribute to FPLD3. In support of this concept, a non-coding mutation in the *PPARG* promoter that significantly reduced promoter activity, has previously been reported in a patient with FPLD3 [130].

4.2. Gene-environment interactions: the impact of nutrition on PPARG expression

Besides indications that the genetic background can modulate the expression of *PPARG*, several studies suggest that *PPARG* expression in AT can be modulated by environmental factors, including nutrition. For instance, the expression of PPARγ in AT was decreased in mice receiving a high fat diet (HFD), which was in part due to increased *PPARG* promoter methylation [60]. Similar results were obtained in *db/db* mice, a well-established model of diabetes due to homozygous mutations in the leptin receptor gene [60]. Human studies that link obesity to the *PPARG* gene promoter methylation status are scarce. So far, one study reported that in subcutaneous AT methylation of the *PPARG* promoter is significantly higher in individuals with a higher amount of visceral AT [144]. The silencing of *PPARG* in subcutaneous adipose tissue may limit lipid-storage capacity in peripheral depots and thereby contribute to a higher amount of visceral AT.

These findings suggest that exposure to a western-type diet, rich in fat, could contribute to a FPLD3 phenotype by further impairing PPARγ function. In addition, these findings imply that a diet intervention may improve the metabolic complications in FPLD3. However, the regulation of PPARγ by nutrition is likely more complicated as another mouse study showed a modest HFD-induced upregulation of PPARγ expression in AT [145]. Furthermore, in obese mice, HFD induced ectopic PPARγ expression in the liver [145]. This study also showed that the expression of PPARγ in murine AT was markedly reduced after starvation for 12–48 h [145]. Refeeding for 24 h partially restored PPARγ expression [145]. Increased PPARγ expression has also been reported in AT of obese humans [146]. A hypocaloric diet downregulates the expression of PPARγ in AT of obese individuals, but expression increases to pre-intervention levels on a weight maintenance diet [146].

In summary, while the exact mechanism/s responsible for the reported gene-nutrient interactions at the *PPARG* locus remain to be defined, several lines of evidence suggest that the expression of PPARγ can be regulated by diet. Diet-induced down-regulation of PPARγ expression in concert with a FPLD3-associated *PPARG* mutation may contribute to FPLD3 by decreasing PPARγ activity below a critical threshold.

4.3. Gene-environment interactions: The impact of pregnancy on PPARG expression

During pregnancy, maternal AT depots are challenged by extreme changes in nutrient status. Appropriate AT expandability and metabolic adaptations are crucial to support adequate fetal growth and development and to prevent metabolic complications in the mother [147]. AT expandability during pregnancy will be challenging for female patients with FPLD3. Data exploring pregnancy outcomes in patients with FPLD3 is limited, but isolated publications have indicated that pregnancies in females with FPLD3 [17,120–123,132,148,149], like other lipodystrophies [150], are often complicated by gestational diabetes, hypertension, severe hypertriglyceridemia, pancreatitis, and pre-eclampsia. These complications may in part be explained by pre-existing metabolic derangements that were not previously recognized and will certainly be influenced by the weight gain and associated increase in insulin resistance frequently associated with pregnancy. However, in some cases, the FPLD3 phenotype became overt during pregnancy [120,151].

The early stage of pregnancy is a predominant anabolic phase with expansion of AT mass due to increased lipid synthesis and storage. This is enabled by maternal hyperphagia and improved insulin sensitivity, which both enhance the availability and uptake of nutrients [147]. In contrast, the last trimester of pregnancy, also denoted as “accelerated starvation”, is characterized by a decrease in AT mass due to accelerated fat catabolism to meet the nutrient demand of the developing fetus [147]. As discussed above, starvation is associated with a decrease in PPARγ mRNA and protein expression. In line with this idea, the expression of PPARγ was reported to decline during the state of “accelerated starvation” in late pregnancy [152]. Interestingly, the expression of PPARγ was lower in obese females with gestational diabetes than in obese females with an uncomplicated pregnancy [152].

We suggest that the deleterious effects of *PPARG* mutations in pregnant females might become particularly physiologically relevant because of a mismatch between excessive energy availability due to maternal hyperphagia and an insufficient AT expandability in women with FPLD3. In line with this, pregnant PPARγ2 knockout mice displayed an exacerbation of insulin resistance and enhanced lipid

accumulation due to limited AT expandability [153]. Furthermore, the physiological decrease in PPARγ expression that occurs during late pregnancy could trigger metabolic disease in women with FPLD3 by further impairing PPARγ expression and activity below the critical threshold (Fig. 3).

PPARγ not only has a crucial role in AT biology during pregnancy, but is also involved in placental development as PPARγ full body knockout mice are embryonic lethal due to abnormalities in placental development [154]. Abnormalities in placental development are a major cause of pre-eclampsia [155]. Given the role of PPARγ in placental development, it might be that female FPLD3 patients carrying a fetus that shares the maternal mutation are at particular risk of developing complications during pregnancy [122].

In summary, it is currently unknown how pregnancy exactly triggers metabolic disease phenotypes in women with FPLD3. However, we suggest that pregnancies in patients with FPLD3 should at least be considered as high-risk pregnancies.

4.4. Gene-environment interactions: the impact of ageing on adipose tissue and PPARG expression

In young healthy individuals, AT is a large and dynamic organ that can readily adapt to environmental changes, like nutrient availability and hormones. AT dysfunction occurs with ageing ("adipaging" [156]) and is characterized by dramatic changes in the amount, distribution, cellular composition, and function of AT [157]. The percentage of body fat throughout middle age and early old age increases in both male and female [158] and is due to increased cell volume [159]. Body mass and the percentage of body fat both decline substantially in very elderly populations [156]. Another common feature with advancing age is the redistribution of AT from primarily subcutaneous AT depots to visceral AT depots and ectopic depots, including liver, muscle, and bone marrow [157]. The age-related AT redistribution is somewhat reminiscent of the FPLD3 phenotype and as in FPLD3, this redistribution is associated with increased metabolic diseases, such as insulin resistance and T2DM [160]. Given the key role of PPARγ in AT biology and the phenotypic similarities between age-related AT redistribution and FPLD3, PPARγ expression and function might be perturbed by ageing and thereby contribute to FPLD3 phenotypes.

The exact molecular mechanisms underlying the age-related redistribution of AT remain to be defined, but intrinsic ageing processes in (pre-) adipocytes have been described. For instance, the relative loss of subcutaneous AT could be explained by differences in cell turnover between subcutaneous and visceral AT depots [161,162]. In addition, an age-related decline in the expression of adipogenic transcription factors, including C/EBPα [163,164] and PPARγ [164,165], can further contribute to the decline in adipocyte size by impairing differentiation and maintenance of pre-adipocytes and lipid storage.

During ageing the expression of many miRNAs decreases due to reduced expression of the miRNA-processing enzyme Dicer [166]. The decline in miRNA processing can be prevented by caloric restriction, a condition that can prolong lifespan [166]. Interestingly, adipose-tissue specific *Dicer*-knock out mice develop a lipodystrophic phenotype with a decrease of WAT mass with a concomitant "whitening" of the intrascapular BAT mass [167]. These mice also developed severe insulin resistance and dyslipidemia. Reintroduction of the downregulated miRNAs partially reversed the phenotype [167]. The expression of *DICER* is significantly lower in subcutaneous AT from patients with HAART-associated lipodystrophy [167,168]. Whether the expression of *DICER* is altered in other types of lipodystrophy, including FPLD3, is unknown. Although the mechanisms have still to be defined, loss of Dicer activity in primary cultures of murine fibroblasts and pre-adipocytes inhibits PPARγ expression and adipocyte differentiation [169]. Therefore, we speculate that alterations in miRNA availability may contribute to FPLD3 by impairing PPARγ expression.

Taken together, while the exact mechanisms are poorly understood, studies suggest that the expression of *PPARG* decreases with advancing age. This age-related decrease in *PPARG* expression may complicate the FPLD3 phenotype by further impairment of PPARγ function. Therefore, follow-up studies of patients with FPLD3 will be of interest to study the impact of ageing on FPLD3.

5. The regulation of PPARγ activity by gene-gene and gene-environment interactions

Like *PPARG* expression, several lines of evidence suggest that the activity of the PPARγ protein also depends on genetic background and can be further modulated by nutrition, the process of ageing, and sex hormones.

5.1. Gene-gene interactions: The impact on PPARγ activity

Compelling evidence indicates that gene-gene interactions, *i.e.* genetic background can affect PPARγ activity on at least two different levels. Firstly, rare (Fig. 2) and common coding variants can modulate PPARγ activity by affecting RXRα heterodimerization, ligand-, and/or cofactor binding. Secondly, the DNA binding capacity of PPARγ can be modulated by non-coding variants in PPARγ response elements (PPREs) situated in regulatory regions of PPARγ target genes.

The two most extensively studied coding SNPs in PPARγ are P12A, unique for PPARγ2, and H477H [170]. The overall population frequency of P12A is 11% (Genome Aggregation Database, gnomAD, accessed in May 2018) [171] but varies, depending on ethnicity, from 2 to 25%. Two large meta-analyses showed a modest (1.25-fold), but significant increased risk of T2DM for the common proline allele [172,173]. *In vitro* experiments show that the Ala variant has a lower binding affinity for cognate promoter elements [174] and also displays a selectively altered coregulator profile [175], both of which probably contribute to a significantly lower transcriptional activity [174] and adipogenic capacity [175]. In a P12A-knockin mouse model it was shown that whilst fed on a chow-diet, Ala/Ala mice are leaner and more insulin sensitive than the Pro/Pro animals [175]. However, the seemingly protective effect of the Ala variant was lost when the mice received a high-fat diet [175]. These results largely correspond with association studies in humans [176]. In lean humans, the Ala variant has been associated with a reduced risk of obesity, whereas in obese patients the Ala variant provides a risk for further weight gain [176]. These observations suggest that the P12A phenotype also depends on environmental factors, including nutrition (discussed below) and possibly physical activity. To complicate matters further, it has recently been questioned whether the phenotypic effects attributed to P12A are in fact due to a regulatory SNP in the PRRX1 binding site affecting the expression of *PPARG* [140].

The silent SNP H477H, also referred to as C1431T to indicate the nucleotide change in this SNP, has a an overall population frequency of 13.4% (Genome Aggregation Database, gnomAD, accessed in May 2018) [171] and is in close linkage disequilibrium with P12A [177]. Although the underlying molecular mechanisms of PPARγ H477H are not exactly known,[1] the T1431 variant is consistently associated with higher BMI. Of note, in contrast to the silent SNP H477H, the substitution of this histidine with a leucine (H477L) is implicated in FPLD3 [134]. The concerted action of P12A and C1431T polymorphisms may explain, at least in part, the discrepancies in population studies in which these polymorphisms were studied in isolation.

[1] According to the ESEfinder tool (available at http://rulai.cshl.edu/cgi-bin/tools/ESE3/esefinder.cgi) the silent SNP H477H, due to C1431T, may disrupt the putative binding sites for the splicing factors SRFR1 (consensus motif TGCCCGA) and SRFR6 (consensus motif CGAGTC). The potential functional consequences for alternative splicing of PPARγ transcripts require further evaluation.

Next to coding SNPs in the *PPARG* locus, non-coding SNPs outside the *PPARG* locus can also have an impact on the transcriptional output of PPARγ. For instance, non-coding SNPs in the PPARγ genomic binding sites can have important metabolic effects and contribute to FPLD3 phenotype variability by affecting PPARγ genomic occupancy [178]. ChIP-seq experiments in white AT (WAT) from two inbred mouse strains, C57BI/6J and 129SImJ129, that differ in their predisposition to obesity-associated insulin resistance [179] indicated mouse strain-selective PPARγ binding sites [178]. These mouse strains differed by 5.3 million SNPs and the strain-selective PPARγ binding sites were enriched for these SNPs. The binding site altering SNPs did not only have an impact on PPARγ binding, but also affected the binding for cooperating transcription factors such as C/EBP transcription factors and the glucocorticoid receptor. The underlying mechanism most likely involves disturbances in assisted loading and imply that SNP altering motifs of other transcription factors can have implications for PPARγ binding too [178]. The same study showed that the mouse strain-selective PPARγ binding sites drive differential gene expression in WAT [178]. Importantly, PPARγ binding site altering SNPs also affect PPARγ occupancy in human adipocytes and a meta-analysis on GWAS indicated that these SNPs are associated with dyslipidemia [178]. Together these results indicate that PPARγ binding site altering SNPs can modulate the human metabolic disease risk [178].

In summary, common coding and non-coding SNPs across the genome can modulate PPARγ expression and activity. Although the majority of the FPLD3 studies do not report the P12A and H477H status, we suggest that in a patient with FPLD3 these, and other variants, in concert with the *PPARG* mutations can contribute to the phenotype by decreasing PPARγ activity below a threshold (Fig. 3).

5.2. Gene-environment interactions: the impact of nutrition on PPARγ activity

Mice that specifically lack PPARγ2 (the isoform that is mainly expressed in adipocytes) can cope when lipid storage demands are low, but fail when adipose tissue is overwhelmed by acute hypercaloric feeding [180]. Accordingly, patients with FPLD3 manifest exquisite sensitivity to over-feeding in general, particularly with a high fat content diet. This relates to the critical role of PPARγ in postprandial lipid buffering by adipose tissue [181]. In one study in which patients with different types of lipodystrophy were deliberately overfed with a HFD, triglyceride levels increased massively within 1 day in a patient with FPLD3 [182]. Similarly, dramatic diet sensitivity has been observed in several other FPLD3 patients (unpublished observations). These findings suggest a potential impact of diet/nutrition on PPARγ activity.

As discussed above, PPARγ can be activated by various endogenous ligands, like polyunsaturated fatty acids (PUFAs), eicosanoids, prostaglandins, and oxidized lipid components [89–93]. Despite intensive research, the identity of a specific, high-affinity, endogenous ligand for PPARγ is still elusive. Furthermore, while the exact molecular mechanisms remain to be defined, PPARγ activity also seem to depend on amino acid sufficiency. This nutrient-sensing signal is likely mediated by mTORC1 which positively regulates PPARγ activity [183]. In keeping with this suggestion, congenital AT-specific Raptor/mTORC1 loss in mice causes progressive generalized lipodystrophy, insulin resistance and severe hepatic steatosis [184]. These findings together, led to the hypothesis that PPARγ may function as a nutrient sensor [89] that dynamically transduces and integrates nutritional signals into gene expression regulation. Therefore, nutrition might be an important environmental factor that affects PPARγ activity. Several lines of evidence suggest that PPARγ activity can be modulated by nutrition on at least two different levels: 1) *via* a shift in nutrient availability/PPARγ ligands and 2) *via* posttranslational modifications (Fig. 4).

Evidence that a shift in the availability of PPARγ ligands can modulate PPARγ activity comes from population-based cohort and case-control studies that assessed the interaction of dietary intake and P12A polymorphism [185–187]. Total intake of dietary fat positively correlated with BMI in homozygous Pro/Pro homozygotes but this correlation was absent in Ala variant allele carriers [186,187]. Another study showed that a diet that contains a relatively high amount of saturated fatty acids is associated with a higher BMI in Ala carriers than Pro carriers [188]. In contrast, when the relative amount of polyunsaturated fatty acids (PUFAs) is higher, Ala carriers tend to have a lower BMI than Pro carriers [188]. Although PPARγ is more efficiently activated by PUFAs, PPARγ can be activated by saturated fatty acids as well [89]. Therefore, an increase in dietary saturated fatty acids - western-type diet - can stimulate PPARγ signalling [188]. However, other studies were unable to confirm the interaction of diet composition and P12A genotype on BMI [186,187], which is perhaps due to difficulties in precisely assessing the intake of dietary fat.

Also, several mouse models provide evidence that PPARγ activity can be modulated by nutrition. As discussed above, the P12A knockin mouse model shows that the beneficial effects of the Ala/Ala genotype are eliminated when the mice were challenged by a HFD [175]. Other indications for gene-nutrient interactions come from knockin mouse models expressing the mouse equivalent of the FPLD3-associated P495L mutation. The metabolic features of FPLD3 could only be recapitulated in mice when the P495L mutations was introduced on a leptin-deficient and hyperphagic *ob/ob* genetic background [189,190]. This study provides strong evidence that an extreme mismatch between excessive nutrient availability due to hyperphagia and AT expandability gives rise to FPLD3 and its related metabolic disorders.

As mentioned above, a third PPARγ protein isoform, denoted as PPARγΔ5, was recently identified in adipose tissue [55]. PPARγΔ5 lacks the entire ligand binding domain (LBD) due to physiological exon 5 skipping [55]. Interestingly, an increase in ligand-mediated PPARγ activation increases *PPARG* exon 5 skipping, leading to enhanced expression of PPARγΔ5. Overexpression of PPARγΔ5 significantly impairs the ability of adipocyte precursor cells to differentiate into adipocytes *via* dominant negative behaviour towards PPARγ WT. Accordingly, the expression of PPARγΔ5 is significantly higher in subcutaneous adipose tissue from overweight/obese and diabetic individuals in comparison with controls and impair the lipid storage capacity in peripheral adipose tissue depots [55]. Therefore, we suggest that the overexpression of PPARγΔ5 due to a shift in nutrient/ligand availability might be a novel mechanism that decreases the overall PPARγ activity below a critical 'pathogenic threshold'.

Recent studies link nutrient availability to reversible posttranslational modifications (PTMs) of PPARγ. Although these PTMs, which include phosphorylation, acetylation, SUMOylation, and ubiquitination, are often studied as individual isolated events, increasing evidence indicates that PTMs in PPARγ are actually interconnected. For simplicity, we will discuss the PTMs separately (Fig. 4).

High fat intake is associated with the development of insulin resistance. The subsequent hyperinsulinemia is usually considered as a compensatory reaction to the insulin resistance. Insulin can indirectly modulate the activity of PPARγ *via* activation of the MAPK signalling pathway, which results in phosphorylation at serine 112 of PPARγ [191] (Fig. 4). Phosphorylation of PPARγ on S112 by MAPKs, decreases the transcriptional activity of PPARγ [192], thereby impairing the pro-adipogenic function of PPARγ. Therefore, HFD-induced insulin resistance can have consequences for PPARγ activity.

Furthermore, HFD-induced insulin resistance and obesity positively associates with phosphorylation of PPARγ S273 by the ERK/Cdk5 axis (Fig. 4) [102–104]. The ERK/Cdk5-mediated phosphorylation of S273 does not impair the adipogenic capacity and general transcriptional activity of PPARγ, but causes the dysregulation of a specific subset of PPARγ target genes, including the insulin-sensitizing adipokine adiponectin [102]. Phosphorylation of S273 by ERK and Cdk5 can be blocked by thiazolidinediones (TZDs) [193].

Interestingly, crystal structures show that lysines 268 and 293 in PPARγ both line the groove containing the Cdk5-dependent phosphorylation site S273 (Fig. 4). While the exact mechanisms require

further evaluation, acetylation of K268 and K293 correlates with the phosphorylation status of S273 [105]. Acetylation of K268 and K293 in PPARγ favours lipid storage and cell proliferation [105]. Deacetylation of K268 and K293 by the deacetylase Sirt1 enhances the interaction of PPARγ with the coactivator Prdm16, a transcription factor that robustly induces the determination and differentiation of brown adipose tissue [194]. This leads to enhanced expression of genes associated with increased energy expenditure and insulin sensitization. In accordance with these data, Sirt1 adipocyte-specific knockout mice display hyperacetylated PPARγ and a decrease in S273 phosphorylation [106]. In addition, knock-in mice in which the K268 and K293 residues are mutated to an arginine (an acetylated-deficient amino acid) are protected from visceral adiposity and diet-induced obesity [107]. Together these observations suggest that acetylation modulates PPARγ activity in concerted action with other PTMs.

Crosstalk between PTMs has also been observed between phosphorylation of S112 and sumoylation of K107; phosphorylation of S112 enhances sumoylation of K107 (Fig. 4) [108]. *In vitro* studies show that sumoylation of K107 represses the transcriptional activity of PPARγ. FGF21, a diet-inducible factor and PPARγ target gene, keeps PPARγ in a transcriptionally active state by preventing sumoylation of PPARγ K107 [195]. *Fgf21*$^{-/-}$ mice display a mild lipodystrophic phenotype, which might be due to a reduction in PPARγ activity [195]. Another *in vivo* study was unable to detect FGF-21 mediated sumoylation in mice [196]. It is possible that differences in strain and breeding strategy may have contributed to the discrepancy, so additional research is required to fully elucidate the biological implications of PPARγ sumoylation at K107.

The tyrosine kinase c-Abl, activated upon stimulation with insulin, is a putative key regulator in adipocyte differentiation. c-Abl can phosphorylate two tyrosine residues in PPARγ, Y78 and Y102, which causes an accumulation of PPARγ [197] and enhances the interaction of PPARγ with PPARγ coactivator 1 alpha (PGC-1α). Interestingly, PPARγ P12A is a poor substrate for c-Abl. The reduced affinity of PPARγ P12A for coactivators, including PGC-1α, might be explained by impaired c-Abl binding and tyrosine phosphorylation [175,197].

The β-O-linked *N*-acetylglucosamine (O-GlcNAc) modification depends on nutrient availability. Mass spectrometric analysis and mutant studies in 3T3L1 cells indicated that threonine 84 in the AF1 domain is the major site for β-O-linked *N*-acetylglucosamine (O-GlcNAc) in PPARγ [112]. O-GlcNAc on T84 inhibits transcriptional activity of PPARγ and impairs adipocyte differentiation [112].

So far, none of the natural occurring *PPARG* mutations affect the exact amino acid residues of PPARγ where covalent modifications occur. Therefore, studies that address PTMs in the context of natural PPARγ mutants are of interest and will provide insights in the physiological relevance of PTMs. For instance, *in vitro* experiments indicated that PPARγ P113Q, a natural PPARγ mutant associated with insulin resistance, impairs phosphorylation of the adjacent phosphorylation site S112 leading to enhanced transcription and accelerated adipocyte differentiation [198]. In addition, the FPLD3-associated PPARγ-mutant P495L interferes with Sirt1 binding and results in hyperacetylated PPARγ protein [105]. As described above, acetylation of K293 favours phosphorylation of S273 [105]. This likely causes further dysregulation of PPARγ target genes [102].

The covalent modifications discussed above are (in)directly responsive to nutrient availability and mainly decrease the overall PPARγ activity. We propose that in carriers of *PPARG* mutations excessive nutrient availability, such as eating a HFD or excessive consumption of saturated fatty acids, could further impair the overall PPARγ activity (both mutant and wildtype receptor) and subsequently lead to overt manifestations of FPLD3 and contribute to the variability in FPLD3 phenotype.

5.3. Gene-environment interactions: the impact of sex hormones on PPARγ activity

Several observations in families affected by FPLD3 suggest that sex hormones affect PPARγ signalling. Firstly, there is a striking female preponderance in FPLD3 (Fig. 2). In the pedigrees with mutations in *PPARG* that have been described so far, the index patient is always female with the only exception being the male index patient harbouring L339X [3,17,29,37,116–123,125,126,128–133,135,139,148,199] (Fig. 2). Secondly, female patients are more severely affected than male patients with respect to metabolic and anthropometric parameters [3,17,29,37,116–123,125,126,128–133,135,139,148,199]. Thirdly, the majority of the currently identified FPLD3 subjects developed their first features of FPLD3 after the onset of puberty [13,45–52,54–65] (Fig. 2). The three prepubertal children harbouring heterozygous mutations in *PPARG* that have been reported so far have (subclinical) metabolic disturbances, but neither child manifested features of lipodystrophy [123,148]. Fourthly, females with FPLD3 seem to be very sensitive to metabolic complications of increased serum lipid concentrations commonly associated with the usage of hormone containing oral contraceptive pills [116; unpublished observations]. Lastly, as discussed above, the FPLD3 metabolic phenotype often deteriorates or only becomes evident during pregnancy [17,120–123,132,148,149]. These findings together suggest that sex hormones and their corresponding receptors could be important determinants of the biological activity of PPARγ. Therefore, patients suffering from FPLD3 constitute an interesting model for exploring the role of sex hormones and their receptors for PPARγ activity in AT distribution and function.

The importance of sex hormones as critical regulators in AT amount and distribution has long been recognized as men and women differ fundamentally with respect to energy metabolism and AT distribution [200]. Males typically store AT in the visceral areas of the upper body, which predisposes them to the development of metabolic dysfunction and cardiovascular disease [201]. Pre-menopausal females have a substantially higher percentage of total body fat compared to males and are protected from metabolic dysfunction by the preferential storage of lipids in the subcutaneous adipose depots of the lower limbs [201,202]. Furthermore, variations in sex hormone concentrations during the different phases of reproductive life parallel shifts in the pattern of AT distribution [203,204]. For instance, post-menopausal females, who are in a continuous state of estrogen deficiency, tend to develop visceral obesity with a concomitant increased predisposition to T2DM and cardiovascular disease. In accordance, hormone-replacement therapy in postmenopausal females is somewhat effective in the prevention of visceral obesity [205,206].

Estrogens exert their effects mainly *via* estrogen receptors α and β (ERα and ERβ). Human mature adipocytes express both ERα [207–209] and ERβ [210]. An anti-diabetogenic function has been proposed for ERα as in mice global deletion of the ERα gene caused a progressive increase in AT with concomitant insulin resistance and impaired glucose tolerance in males and females [211–213]. In addition, similar metabolic features were observed in human individuals harbouring homozygous loss-of-function mutations in the *ESR1* gene, encoding for ERα [214,215]. In contrast, a pro-diabetogenic function of ERβ in AT has been suggested [213,216,217].

Like PPARγ, ERs are members of the superfamily of nuclear receptors (NRs) and the molecular mechanisms underlying nuclear receptor function are largely similar. The convergence of signalling pathways between ERs and PPARγ, denoted as signalling crosstalk, has previously been recognized in different cell systems and tissues [218–221]. Mechanisms of negative as well as positive crosstalk between ERs and PPARγ vary and occur at different levels, including utilization of common response elements [222–224], (in)direct physical interaction between ERs and PPARγ [224,225], shared pools of coregulators [226], ER-induced synthesis of PPARγ ligand [227], and PPARγ-mediated proteosomal degradation of ER [228].

To date, at least one level of ER/PPARγ signalling crosstalk has been reported in AT. *In vitro* experiments in 3T3L1 preadipocytes indicated that ERβ inhibits the transcriptional activity of PPARγ and suppresses adipocyte differentiation [217]. This inhibition was prevented by overexpression of the nuclear co-activators SRC1 and TIF2, suggesting

competition between ERβ and PPARγ for binding to co-activators. In agreement with these findings, HFD-fed ERβ knockout mice exhibited augmented PPARγ signalling in AT, which protected the ERβ knockout mice from insulin resistance and glucose tolerance [217]. In contrast, disruption of the PPARγ signalling by antisense oligonucleotide impaired insulin sensitization and glucose tolerance [217].

We speculate that in a condition of PPARγ deficiency, as occurs in FPLD3, interference of ER in the already compromised PPARγ signalling can further impair PPARγ activity and contribute to the variability in FPLD3 phenotype. Therefore, it is conceivable that i) premenopausal females with mutations in *PPARG* are in general more prone to development of FPLD3 compared to males and ii) FPLD3 develops after onset of puberty. Based on this model, females with FPLD3 are at risk for developing severe metabolic complications in circumstances with elevated estrogen concentrations, including usage of estrogen containing oral contraceptive pills and pregnancy (discussed above).

Although beyond the scope of this review, the signalling crosstalk between PPARγ and ER is more complicated as potential interactions between PPARγ and other nuclear receptors, including the androgen receptor and progesterone receptor, should be taken into account as well. Another layer of complexity, which requires further research, is the impact of continuous and simultaneous exposure of endocrine-disrupting chemicals (EDCs) on PPARγ and ER signalling crosstalk.

5.4. Gene-environment interactions: the impact of ageing on PPARγ activity

As discussed above, proper adipose tissue mass and function are crucial for metabolic health during ageing. The process of ageing not only has an effect on *PPARG* expression as discussed above, but several studies suggest that ageing can also modulate PPARγ activity. In mice, ageing triggers a specific reduction of SRC1, an important coactivator of PPARγ, causing a subsequent impairment in SRC1 recruitment to PPARγ [229]. This age-dependent alteration in transcriptional cofactor recruitment might be related to an age-related increase in phosphorylation of PPARγ S273 [230]. It remains to be defined whether the age-related increase in phosphorylation of S273 also leads to age-selective reduction in expression of PPARγ target genes.

Interestingly, in lung cancer cells it has recently been demonstrated that phosphorylation of PPARγ S273 is required for interaction of PPARγ with the tumor suppressor p53 [231]. While p53 is best known for its role in cancer development, emerging evidence indicates that p53 is a key player in adipose tissue biology as well (reviewed in [232]). p53 inhibits adipogenesis and is required for maintaining proper adipose tissue function [232]. Furthermore, chronic p53 activation has been associated with ageing in mice [232] and chronic p53 activation in AT by genetic disruption of the proximal p53 inhibitor MDM2 leads to age-dependent lipodystrophy [233]. Together, these findings suggest that tight regulation of p53 is crucial to prevent ageing-related lipodystrophy [233]. On a more speculative level, given the age-related increase in phosphorylation of S273 in AT, the PPARγ/p53 interaction might also be relevant in AT.

In summary, the parallels in age-related AT dysfunction and FPLD3 may suggest common molecular mechanisms. Therefore, patients with FPLD3 might be considered as a simplified *in vivo* model for "adipaging". To gain further insight in the modulation of FPLD3 by ageing, follow-up studies in patients with FPLD3 would be of interest.

6. Conclusions

Genetic lipodystrophies, subclassified as generalized and partial lipodystrophy, have for long been considered as monogenic disorders. However, the expanding availability of whole genome sequencing data greatly improved the genetic elucidation of lipodystrophies and the traditional classification of genetic lipodystrophies into generalized *vs.* partial is now being challenged. An increasing number of studies indicate the existence of considerable genetic, allelic, phenotypic and clinical heterogeneity.

The *PPARG* gene is one of the best characterized lipodystrophy-associated genes. Therefore, we explored the potential impact of genomic and environmental context on PPARγ expression and activity in AT. It has to be considered that each of the gene-gene and gene-environment interactions discussed above probably has a small modifying effect on the FPLD3 phenotype, but their cumulative impact can be relevant in the onset and progression of FPLD3 by impairing PPARγ activity in concert with the heterozygous *PPARG* mutations below a critical threshold of PPARγ activity (Fig. 3). In addition, the extent of these cumulative effects on phenotypic expression can vary considerably among patients with FPLD3 - as the interactions can range from being independent to interconnected - and is likely key to the observed phenotypic or clinical variability in FPLD3.

Here, we pointed out that lipodystrophy caused by a particular mutation not only depends on the mutation itself as mutations do not occur in a vacuum, but are rather present in a certain genetic background and within a dynamic environmental context. Clearly, there are challenges ahead to gain further insight into the genomic and environmental context that influences genes and pathways implicated in other types of lipodystrophy. Elucidating how genetic background and environmental context alter the effect of a given mutation will not only expand our current knowledge of genotype-phenotype correlations in lipodystrophies, but will likely facilitate detailed dissection of biological pathways in AT and further improve our molecular understanding of AT dysfunction in rare as well as common diseases, such as obesity. In turn, this may also provide opportunities for new and safer drug therapies.

Less is known about genetic and environmental modifiers in the onset and progression of other types of lipodystrophy. However, a gender bias with a female preponderance in ascertainment and severity has also been described for FPLD2 [234]. In addition, the divergent phenotypic variability in the clinical presentation of CGL2 among 18 Brazilian individuals with the same mutation in *BSCL2* also suggest modifying interactions with other genes and/or environmental factors [235]. In summary, gene-gene and gene-environmental interactions, the importance of which is often overlooked, introduce another layer of complexity in lipodystrophies. These influences are very likely to be contributing to the range of phenotypes associated with monogenic lipodystrophies.

Conflict of interest

The authors declare no conflict of interest.

Transparency document

The Transparency document associated with this article can be found, in online version.

Acknowledgments

D.B.S. is supported by the Wellcome Trust (WT 107064), the MRC Metabolic Disease Unit, the National Institute for Health Research (NIHR) Cambridge Biomedical Research Centre and NIHR Rare Disease Translational Research Collaboration.

References

[1] R.J. Brown, D. Araujo-Vilar, P.T. Cheung, D. Dunger, A. Garg, M. Jack, L. Mungai, E.A. Oral, N. Patni, K. Rother, J. von Schnurbein, E. Sorkina, T. Stanley, C. Vigouroux, M. Wabitsch, R. Williams, T. Yorifuji, The Diagnosis and Management of Lipodystrophy Syndromes: A Multi-Society Practice Guideline, J. Clin. Endocrinol. Metab. (2016), https://doi.org/10.1210/jc.2016-2466.
[2] A. Garg, Lipodystrophies: genetic and acquired body fat disorders, J. Clin. Endocrinol. Metab. 96 (2011), https://doi.org/10.1210/jc.2011-1159.
[3] A.R. Majithia, B. Tsuda, M. Agostini, K. Gnanapradeepan, R. Rice, G. Peloso,

K.A. Patel, X. Zhang, M.F. Broekema, N. Patterson, M. Duby, T. Sharpe, E. Kalkhoven, E.D. Rosen, I. Barroso, S. Ellard, S. Kathiresan, S. O'Rahilly, K. Chatterjee, J.C. Florez, T. Mikkelsen, D.B. Savage, D. Altshuler, Prospective functional classification of all possible missense variants in PPARG, Nat. Genet. (2016), https://doi.org/10.1038/ng.3700.

[4] C. Thauvin-Robinet, M. Auclair, L. Duplomb, M. Caron-Debarle, M. Avila, J. St-Onge, M. Le Merrer, B. Le Luyer, D. Héron, M. Mathieu-Dramard, P. Bitoun, J.-M. Petit, S. Odent, J. Amiel, D. Picot, V. Carmignac, J. Thevenon, P. Callier, M. Laville, Y. Reznik, C. Fagour, M.-L. Nunes, J. Capeau, O. Lascols, F. Huet, L. Faivre, C. Vigouroux, J.-B. Rivière, PIK3R1 Mutations Cause Syndromic Insulin Resistance with Lipoatrophy, Am. J. Hum. Genet. 93 (2013) 141–149, https://doi.org/10.1016/j.ajhg.2013.05.019.

[5] A.K. Agarwal, J.-P.P. Fryns, R.J. Auchus, A. Garg, Zinc metalloproteinase, ZMPSTE24 , is mutated in mandibuloacral dysplasia, Hum. Mol. Genet. 12 (2003) 1995–2001, https://doi.org/10.1093/hmg/ddg213.

[6] B. Donadille, P. D'Anella, M. Auclair, N. Uhrhammer, M. Sorel, R. Grigorescu, S. Ouzounian, G. Cambonie, P. Boulot, P. Laforêt, B. Carbonne, S. Christin-Maitre, Y.-J. Bignon, C. Vigouroux, Partial lipodystrophy with severe insulin resistance and adult progeria Werner syndrome, Orphanet J. Rare Dis. 8 (2013) 106, https://doi.org/10.1186/1750-1172-8-106.

[7] M.N. Weedon, S. Ellard, M.J. Prindle, R. Caswell, H.L. Allen, R. Oram, K. Godbole, C.S. Yajnik, P. Sbraccia, G. Novelli, P. Turnpenny, E. McCann, K.J. Goh, Y. Wang, J. Fulford, L.J. McCulloch, D.B. Savage, S. O'Rahilly, K. Kos, L.A. Loeb, R.K. Semple, A.T. Hattersley, An in-frame deletion at the polymerase active site of POLD1 causes a multisystem disorder with lipodystrophy, Nat. Genet. 45 (2013) 947–950, https://doi.org/10.1038/ng.2670.

[8] L.N. Heidemann, J.B. Thomsen, J.A. Sørensen, Barraquer-Simons syndrome: a unique patient's perspective on diagnosis, disease progression and recontouring treatment, BMJ Case Reports 2016 (2016), https://doi.org/10.1136/bcr-2016-216134.

[9] C.M. Verolet, C. Delhumeau-Cartier, M. Sartori, S. Toma, S. Zawadynski, M. Becker, E. Bernasconi, L.T. Trellu, A. Calmy, T.L.G. Metabolism, Lipodystrophy among HIV-infected patients: a cross-sectional study on impact on quality of life and mental health disorders, AIDS Res. Ther. 12 (2015) 21, https://doi.org/10.1186/s12981-015-0061-z.

[10] C. Adams, A. Stears, D. Savage, C. Deaton, "We're stuck with what we've got": The impact of lipodystrophy on body image, J. Clin. Nurs. 0 (2018), https://doi.org/10.1111/jocn.14342.

[11] A.K. Agarwal, E. Arioglu, S. De Almeida, N. Akkoc, S.I. Taylor, A.M. Bowcock, R.I. Barnes, A. Garg, AGPAT2 is mutated in congenital generalized lipodystrophy linked to chromosome 9q34, Nat. Genet. 31 (2002) 21–23, https://doi.org/10.1038/ng880.

[12] J. Magre, M. Delepine, E. Khallouf, T. Gedde-Dahl, L. Van Maldergem, E. Sobel, J. Papp, M. Meier, A. Megarbane, B.W. Group, M. Lathrop, J. Capeau, J. Magré, M. Delépine, E. Khallouf, T. Gedde-Dahl, L. Van Maldergem, E. Sobel, J. Papp, M. Meier, A. Mégarbané, A. Bachy, A. Verloes, F.H. d'Abronzo, E. Seemanova, R. Assan, N. Baudic, C. Bourut, P. Czernichow, F. Huet, F. Grigorescu, M. de Kerdanet, D. Lacombe, P. Labrune, M. Lanza, H. Loret, F. Matsuda, J. Navarro, A. Nivelon-Chevalier, M. Polak, J.J. Robert, P. Tric, N. Tubiana-Rufi, C. Vigouroux, J. Weissenbach, S. Savasta, J.A. Maassen, O. Trygstad, P. Bogalho, P. Freitas, J.L. Medina, F. Bonnicci, B.I. Joffe, G. Loyson, V.R. Panz, F.J. Raal, S. O'Rahilly, T. Stephenson, C.R. Kahn, M. Lathrop, J. Capeau, Identification of the gene altered in Berardinelli-Seip congenital lipodystrophy on chromosome 11q13, Nat. Genet. 28 (2001) 365–370, https://doi.org/10.1038/ng585.

[13] C.A. Kim, M. Delépine, E. Boutet, H. El Mourabit, S. Le Lay, M. Meier, M. Nemani, E. Bridel, C.C. Leite, D.R. Bertola, R.K. Semple, S. O'Rahilly, I. Dugail, J. Capeau, M. Lathrop, J. Magré, M. Delépine, E. Boutet, H. El Mourabit, S. Le Lay, M. Meier, M. Nemani, E. Bridel, C.C. Leite, D.R. Bertola, R.K. Semple, S. O'Rahilly, I. Dugail, J. Capeau, M. Lathrop, J. Magré, Association of a homozygous nonsense caveolin-1 mutation with berardinelli-seip congenital lipodystrophy, J. Clin. Endocrinol. Metab. 93 (2008) 1129–1134, https://doi.org/10.1210/jc.2007-1328.

[14] Y.K. Hayashi, C. Matsuda, M. Ogawa, K. Goto, K. Tominaga, S. Mitsuhashi, Y.-E.E. Park, I. Nonaka, N. Hino-Fukuyo, K. Haginoya, H. Sugano, I. Nishino, Human PTRF mutations cause secondary deficiency of caveolins resulting in muscular dystrophy with generalized lipodystrophy, J. Clin. Invest. 119 (2009) 2623–2633, https://doi.org/10.1172/JCI38660.

[15] N. Patni, A. Garg, Congenital generalized lipodystrophies—new insights into metabolic dysfunction, Nat. Rev. Endocrinol. 11 (2015) 522–534, https://doi.org/10.1038/nrendo.2015.123.

[16] H. Cao, R.A. Hegele, Nuclear lamin A/C R482Q mutation in canadian kindreds with Dunnigan-type familial partial lipodystrophy, Hum. Mol. Genet. 9 (2000) 109–112, https://doi.org/10.1093/hmg/9.1.109.

[17] I. Barroso, M. Gurnell, V.E.F. Crowley, M. Agostini, J.W. Schwabe, M.A. Soos, G.L. Maslen, T.D.M. Williams, H. Lewis, A.J. Schafer, V.K.K. Chatterjee, S. O'Rahilly, Dominant negative mutations in human PPAR gamma associated with severe insulin resistance, diabetes mellitus and hypertension, Nature. 402 (1999) 880–883.

[18] S. Gandotra, C. Le Dour, W. Bottomley, P. Cervera, P. Giral, Y. Reznik, G. Charpentier, M. Auclair, M. Delépine, I. Barroso, R.K. Semple, M. Lathrop, O. Lascols, J. Capeau, S. O'Rahilly, J. Magré, D.B. Savage, C. Vigouroux, Perilipin deficiency and autosomal dominant partial lipodystrophy, N. Engl. J. Med. 364 (2011) 740–748, https://doi.org/10.1056/NEJMoa1007487.

[19] O. Rubio-Cabezas, V. Puri, I. Murano, V. Saudek, R.K. Semple, S. Dash, C.S.S. Hyden, W. Bottomley, C. Vigouroux, J. Magré, P. Raymond-Barker, P.R. Murgatroyd, A. Chawla, J.N. Skepper, V.K. Chatterjee, S. Suliman, A.-M. Patch, A.K. Agarwal, A. Garg, I. Barroso, S. Cinti, M.P. Czech, J. Argente, S. O'Rahilly, D.B. Savage, Partial lipodystrophy and insulin resistant diabetes in a patient with a homozygous nonsense mutation in CIDEC, EMBO Mol. Med. 1 (2009) 280–287, https://doi.org/10.1002/emmm.200900037.

[20] N. Carboni, F. Brancati, E. Cocco, E. Solla, M.R. D'Apice, A. Mateddu, A. McIntyre, E. Fadda, M. Mura, G. Lattanzi, R. Piras, M.A. Maioli, G. Marrosu, G. Novelli, M.G. Marrosu, R.A. Hegele, Partial lipodystrophy associated with muscular dystrophy of unknown genetic origin, Muscle Nerve 49 (2014) 928–930, https://doi.org/10.1002/mus.24157.

[21] J.S. Albert, L.M. Yerges-Armstrong, R.B. Horenstein, T.I. Pollin, U.T. Sreenivasan, S. Chai, W.S. Blaner, S. Snitker, J.R. O'Connell, D.-W. Gong, R.J. Breyer, A.S. Ryan, J.C. McLenithan, A.R. Shuldiner, C. Sztalryd, C.M. Damcott, Null Mutation in Hormone-Sensitive Lipase Gene and Risk of Type 2 Diabetes, N. Engl. J. Med. 370 (2014) 2307–2315, https://doi.org/10.1056/NEJMoa1315496.

[22] F. Payne, K. Lim, A. Girousse, R.J. Brown, N. Kory, A. Robbins, Y. Xue, A. Sleigh, E. Cochran, C. Adams, A. Dev Borman, D. Russel-Jones, P. Gorden, R.K. Semple, V. Saudek, S. O'Rahilly, T.C. Walther, I. Barroso, D.B. Savage, Mutations disrupting the Kennedy phosphatidylcholine pathway in humans with congenital lipodystrophy and fatty liver disease, Proc. Natl. Acad. Sci. 111 (2014) 8901–8906, https://doi.org/10.1073/pnas.1408523111.

[23] A. Garg, S. Sankella, C. Xing, A.K. Agarwal, Whole-exome sequencing identifies ADRA2A mutation in atypical familial partial lipodystrophy, JCI Insight. 1 (2016), https://doi.org/10.1172/jci.insight.86870.

[24] S.L. Sawyer, A. Cheuk-Him Ng, A.M. Innes, J.D. Wagner, D.A. Dyment, M. Tetreault, C.C. Consortium, J. Majewski, K.M. Boycott, R.A. Screaton, G. Nicholson, Homozygous mutations in MFN2 cause multiple symmetric lipomatosis associated with neuropathy, Hum. Mol. Genet. 24 (2015) 5109–5114, https://doi.org/10.1093/hmg/ddv229.

[25] N. Rocha, D.A. Bulger, A. Frontini, H. Titheradge, S.B. Gribsholt, R. Knox, M. Page, J. Harris, F. Payne, C. Adams, A. Sleigh, J. Crawford, A.P. Gjesing, J. Bork-Jensen, O. Pedersen, I. Barroso, T. Hansen, H. Cox, M. Reilly, A. Rossor, R.J. Brown, S.I. Taylor, D. McHale, M. Armstrong, E.A. Oral, V. Saudek, S. O'Rahilly, E.R. Maher, B. Richelsen, D.B. Savage, R.K. Semple, Human biallelic MFN2 mutations induce mitochondrial dysfunction, upper body adipose hyperplasia, and suppression of leptin expression, Elife 6 (2017) e23813, , https://doi.org/10.7554/eLife.23813.

[26] U. Perera, B.A. Kennedy, R.A. Hegele, Multiple Symmetric Lipomatosis (Madelung Disease) in a Large Canadian Family With the Mitochondrial MTTK c.8344A > G Variant, J. Investig. Med. High Impact Case Reports. 6 (2018), https://doi.org/10.1177/2324709618802867.

[27] L.A. Lotta, P. Gulati, F.R. Day, F. Payne, H. Ongen, M. van de Bunt, K.J. Gaulton, J.D. Eicher, S.J. Sharp, J. Luan, E. De Lucia Rolfe, I.D. Stewart, E. Wheeler, S.M. Willems, C. Adams, H. Yaghootkar, E.-I. Consortium, C.F. Consortium, N.G. Forouhi, K.-T. Khaw, A.D. Johnson, R.K. Semple, T. Frayling, J.R.B. Perry, E. Dermitzakis, M.I. McCarthy, I. Barroso, N.J. Wareham, D.B. Savage, C. Langenberg, S. O'Rahilly, R.A. Scott, Integrative genomic analysis implicates limited peripheral adipose storage capacity in the pathogenesis of human insulin resistance, Nat. Genet. 49 (2017) 17–26, https://doi.org/10.1038/ng.3714.

[28] T.W. Laver, K.A. Patel, K. Colclough, J. Curran, J. Dale, N. Davis, D.B. Savage, S.E. Flanagan, S. Ellard, A.T. Hattersley, M.N. Weedon, PLIN1 haploinsufficiency is not associated with lipodystrophy, J. Clin. Endocrinol. Metab. (2018), https://doi.org/10.1210/jc.2017-02662.

[29] D.A. Dyment, W.T. Gibson, L. Huang, H. Bassyouni, R.A. Hegele, A.M. Innes, Biallelic mutations at PPARG cause a congenital, generalized lipodystrophy similar to the Berardinelli-Seip syndrome, Eur. J. Med. Genet. 57 (2014) 524–526, https://doi.org/10.1016/j.ejmg.2014.06.006.

[30] S. Shackleton, D.J. Lloyd, S.N. Jackson, R. Evans, M.F. Niermeijer, B.M. Singh, H. Schmidt, G. Brabant, S. Kumar, P.N. Durrington, S. Gregory, S. O'Rahilly, R.C. Trembath, LMNA, encoding lamin A/C, is mutated in partial lipodystrophy, Nat. Genet. 24 (2000) 153–156, https://doi.org/10.1038/72807.

[31] F. Caux, E. Dubosclard, O. Lascols, B. Buendia, O. Chazouillères, A. Cohen, J.C. Courvalin, L. Laroche, J. Capeau, C. Vigouroux, S. Christin-Maitre, A new clinical condition linked to a novel mutation in lamins A and C with generalized lipoatrophy, insulin-resistant diabetes, disseminated leukomelanodermic papules, liver steatosis, and cardiomyopathy, J. Clin. Endocrinol. Metab. 88 (2003), https://doi.org/10.1210/jc.2002-021506.

[32] A. Garg, M. Kircher, M. del Campo, R.S. Amato, A.K. Agarwal, U. of W.C. for M. Genomics, Whole Exome Sequencing Identifies De Novo Heterozygous CAV1 Mutations Associated with a Novel Neonatal Onset Lipodystrophy Syndrome, Am. J. Med. Genet. A (2015) 1796–1806, https://doi.org/10.1002/ajmg.a.37115 167A.

[33] M.F. Broekema, M.P.G. Massink, J. De Ligt, E.C. Stigter, H. Monajemi, J. De Ridder, B.M.T. Burgering, G.W. van Haaften, E. Kalkhoven, A Single Complex Agpat2 Allele In A Patient With Partial Lipodystrophy, Front. Physiol. 9 (2018) 10.3389.

[34] A.K. Agarwal, A. Garg, Genetic disorders of adipose tissue development, differentiation, and death, Annu. Rev. Genomics Hum. Genet. 7 (2006) 175–199, https://doi.org/10.1146/annurev.genom.7.080505.115715.

[35] Y. Tsai, P.-J. Tsai, M.-J. Jiang, T.-Y. Chou, A. Pendse, H.-S. Kim, N. Maeda, Decreased PPARγ Expression Compromises Perigonadal-Specific Fat Deposition and Insulin Sensitivity, Mol. Endocrinol. 23 (2009) 1787–1798, https://doi.org/10.1210/me.2009-0073.

[36] A.R. Majithia, J. Flannick, P. Shahinian, M. Guo, M.-A. Bray, P. Fontanillas, S.B. Gabriel, GoT2D Consortium, NHGRI JHS/FHS Allelic Spectrum Project, SIGMA T2D Consortium, T2D-GENES Consortium, E.D. Rosen, D. Altshuler, Rare variants in PPARG with decreased activity in adipocyte differentiation are associated with increased risk of type 2 diabetes, Proc. Natl. Acad. Sci. U. S. A. 111

(2014) 13127–13132, https://doi.org/10.1073/pnas.1410428111.
[37] D.B. Savage, M. Agostini, I. Barroso, M. Gurnell, J. Luan, A. Meirhaeghe, A.-H. Harding, G. Ihrke, O. Rajanayagam, M. a Soos, S. George, D. Berger, E.L. Thomas, J.D. Bell, K. Meeran, R.J. Ross, A. Vidal-Puig, N.J. Wareham, S. O'Rahilly, V.K.K. Chatterjee, A.J. Schafer, Digenic inheritance of severe insulin resistance in a human pedigree, Nat. Genet. 31 (2002) 379–384, https://doi.org/10.1038/ng926.
[38] D. Capaccio, A. Ciccodicola, L. Sabatino, A. Casamassimi, M. Pancione, A. Fucci, A. Febbraro, A. Merlino, G. Graziano, V. Colantuoni, A novel germline mutation in peroxisome proliferator-activated receptor gamma gene associated with large intestine polyp formation and dyslipidemia, Biochim. Biophys. Acta 1802 (2010) 572–581, https://doi.org/10.1016/j.bbadis.2010.01.012.
[39] R. Nielsen, L. Grøntved, H.G. Stunnenberg, S. Mandrup, Peroxisome proliferator-activated receptor subtype- and cell-type-specific activation of genomic target genes upon adenoviral transgene delivery, Mol. Cell. Biol. 26 (2006) 5698–5714, https://doi.org/10.1128/MCB.02266-05.
[40] R. Nielsen, T.A.Å. Pedersen, D. Hagenbeek, P. Moulos, R. Siersbaek, E. Megens, S. Denissov, M. Børgesen, K.-J. Francoijs, S. Mandrup, H.G. Stunnenberg, R. Siersbæk, E. Megens, S. Denissov, M. Børgesen, K.-J. Francoijs, S. Mandrup, H.G. Stunnenberg, Genome-wide profiling of PPARγ:RXR and RNA polymerase II occupancy reveals temporal activation of distinct metabolic pathways and changes in RXR dimer composition during adipogenesis, Genes Dev. 22 (2008) 2953–2967, https://doi.org/10.1101/gad.501108.
[41] R. Siersbæk, A. Rabiee, R. Nielsen, S. Sidoli, S. Traynor, A. Loft, L. Poulsen, A. Rogowska-Wrzesinska, O.N. Jensen, S. Mandrup, Transcription factor cooperativity in early adipogenic hotspots and super-enhancers, Cell Rep. 7 (2014) 1443–1455, https://doi.org/10.1016/j.celrep.2014.04.042.
[42] R. Siersbæk, R. Nielsen, S. John, M.-H.M. Sung, S. Baek, A. Loft, G.L. Hager, S. Mandrup, Extensive chromatin remodelling and establishment of transcription factor 'hotspots' during early adipogenesis, EMBO J. 30 (2011) 1459 LP–1472, https://doi.org/10.1038/emboj.2011.65.
[43] M.S. Siersbaek, A. Loft, M.M. Aagaard, R. Nielsen, S.F. Schmidt, N. Petrovic, J. Nedergaard, S. Mandrup, M.S. Siersbæk, A. Loft, M.M. Aagaard, R. Nielsen, S.F. Schmidt, N. Petrovic, J. Nedergaard, S. Mandrup, Genome-Wide Profiling of Peroxisome Proliferator-Activated Receptor γ in Primary Epididymal, Inguinal, and Brown Adipocytes Reveals Depot-Selective Binding Correlated with Gene Expression, Mol. Cell. Biol. 32 (2012) 3452–3463, https://doi.org/10.1128/MCB.00526-12.
[44] M.S. Madsen, R. Siersbæk, M. Boergesen, R. Nielsen, S. Mandrup, Peroxisome Proliferator-Activated Receptor γ and C/EBPα Synergistically Activate Key Metabolic Adipocyte Genes by Assisted Loading, Mol. Cell. Biol. 34 (2014) 939–954, https://doi.org/10.1128/MCB.01344-13.
[45] R. Siersbæk, J.G.S. Madsen, B.M. Javierre, R. Nielsen, E.K. Bagge, J. Cairns, S.W. Wingett, S. Traynor, M. Spivakov, P. Fraser, S. Mandrup, Dynamic Rewiring of Promoter-Anchored Chromatin Loops during Adipocyte Differentiation, Mol. Cell 66 (2017) 420–435.e5, https://doi.org/10.1016/j.molcel.2017.04.010.
[46] M.I. Lefterova, Y. Zhang, D.J. Steger, M. Schupp, J. Schug, A. Cristancho, D. Feng, D. Zhuo, C.J. Stoeckert, X.S. Liu, M.A. Lazar, PPARγ and C/EBP factors orchestrate adipocyte biology via adjacent binding on a genome-wide scale, Genes Dev. 22 (2008) 2941–2952, https://doi.org/10.1101/gad.1709008.
[47] M.I. Lefterova, D.J. Steger, D. Zhuo, M. Qatanani, S.E. Mullican, G. Tuteja, E. Manduchi, G.R. Grant, A. Mitchell, M.A. Lazar, Cell-Specific Determinants of Peroxisome Proliferator-Activated Receptor γ Function in Adipocytes and Macrophages Cell-Specific Determinants of Peroxisome Proliferator-Activated Receptor ✐ Function in Adipocytes and Macrophages □ §, Mol. Cell. Biol. 30 (2010) 2078–2089, https://doi.org/10.1128/MCB.01651-09.
[48] C. Dreyer, G. Krey, H. Keller, F. Givel, G. Helftenbein, W. Wahli, Control of the peroxisomal β-oxidation pathway by a novel family of nuclear hormone receptors, Cell. 68 (1992) 879–887, https://doi.org/10.1016/0092-8674(92)90031-7.
[49] E.D. Rosen, C.-H. Hsu, X. Wang, S. Sakai, M.W. Freeman, F.J. Gonzalez, B.M. Spiegelman, C/EBPα induces adipogenesis through PPARγ: a unified pathway, Genes Dev. 16 (2002) 22–26, https://doi.org/10.1101/gad.948702.
[50] T. Imai, R. Takakuwa, S. Marchand, E. Dentz, J.-M. Bornert, N. Messaddeq, O. Wendling, M. Mark, B. Desvergne, W. Wahli, P. Chambon, D. Metzger, Peroxisome proliferator-activated receptor γ is required in mature white and brown adipocytes for their survival in the mouse, Proc. Natl. Acad. Sci. U. S. A. 101 (2004) 4543 LP–4547 http://www.pnas.org/content/101/13/4543.abstract.
[51] M.E. Greene, B. Blumberg, O.W. McBride, H.F. Yi, K. Kronquist, K. Kwan, L. Hsieh, G. Greene, S.D. Nimer, Isolation of the human peroxisome proliferator activated receptor gamma cDNA: expression in hematopoietic cells and chromosomal mapping, Gene Expr. 4 (1995) 281–299.
[52] L. Fajas, D. Auboeuf, E. Raspé, K. Schoonjans, A.-M. Lefebvre, R. Saladin, J. Najib, M. Laville, J.-C. Fruchart, S. Deeb, A. Vidal-Puig, J. Flier, M.R. Briggs, B. Staels, H. Vidal, J. Auwerx, The Organization, Promoter Analysis, and Expression of the Human PPARγ Gene, J. Biol. Chem. 272 (1997) 18779–18789, https://doi.org/10.1074/jbc.272.30.18779.
[53] P. Escher, O. Braissant, S. Basu-Modak, L. Michalik, W. Wahli, B. Desvergne, Rat PPARs: Quantitative Analysis in Adult Rat Tissues and Regulation in Fasting and Refeeding, Endocrinology. 142 (2001) 4195–4202, https://doi.org/10.1210/endo.142.10.8458.
[54] E. Mueller, S. Drori, A. Aiyer, J. Yie, P. Sarraf, H. Chen, S. Hauser, E.D. Rosen, K. Ge, R.G. Roeder, B.M. Spiegelman, Genetic Analysis of Adipogenesis through Peroxisome Proliferator-activated Receptor γ Isoforms, J. Biol. Chem. 277 (2002) 41925–41930, https://doi.org/10.1074/jbc.M206950200.
[55] M. Aprile, S. Cataldi, M.R. Ambrosio, V. D'Esposito, K. Lim, A. Dietrich, M. Blüher, D.B. Savage, P. Formisano, A. Ciccodicola, V. Costa, PPARγΔ5, a Naturally Occurring Dominant-Negative Splice Isoform, Impairs PPARγ Function and Adipocyte Differentiation, Cell Rep. 25 (2018) 1577–1592.e6, https://doi.org/10.1016/j.celrep.2018.10.035.
[56] D.J. Steger, G.R. Grant, M. Schupp, T. Tomaru, M.I. Lefterova, J. Schug, E. Manduchi, C.J. Stoeckert, M.A. Lazar, Propagation of adipogenic signals through an epigenomic transition state, Genes Dev. 24 (2010) 1035–1044, https://doi.org/10.1101/gad.1907110.
[57] T.S. Mikkelsen, Z. Xu, X. Zhang, L. Wang, J.M. Gimble, E.S. Lander, E.D. Rosen, Comparative epigenomic analysis of murine and human adipogenesis, Cell. 143 (2010) 156–169, https://doi.org/10.1016/j.cell.2010.09.006.
[58] A.G. Cristancho, M.A. Lazar, Forming functional fat: a growing understanding of adipocyte differentiation, Nat. Rev. Mol. Cell Biol. 12 (2011) 722, https://doi.org/10.1038/nrm3198.
[59] S. Sugii, R.M. Evans, Epigenetic codes of PPAR?? in metabolic disease, FEBS Lett. 585 (2011) 2121–2128, https://doi.org/10.1016/j.febslet.2011.05.007.
[60] K. Fujiki, F. Kano, K. Shiota, M. Murata, Expression of the peroxisome proliferator activated receptor γ gene is repressed by DNA methylation in visceral adipose tissue of mouse models of diabetes, BMC Biol. 7 (2009) 38, https://doi.org/10.1186/1741-7007-7-38.
[61] K. Wakabayashi, M. Okamura, S. Tsutsumi, N.S. Nishikawa, T. Tanaka, I. Sakakibara, J. Kitakami, S. Ihara, Y. Hashimoto, T. Hamakubo, T. Kodama, H. Aburatani, J. Sakai, The Peroxisome Proliferator-Activated Receptor γ/Retinoid X Receptor α Heterodimer Targets the Histone Modification Enzyme PR-Set7/Setd8 Gene and Regulates Adipogenesis through a Positive Feedback Loop, Mol. Cell. Biol. 29 (2009) 3544–3555, https://doi.org/10.1128/MCB.01856-08.
[62] Z. Cao, R.M. Umek, S.L. McKnight, Regulated expression of three C/EBP isoforms during adipose conversion of 3T3-L1 cells, Genes Dev. 5 (1991) 1538–1552, https://doi.org/10.1101/gad.5.9.1538.
[63] S.L. Clarke, C.E. Robinson, J.M. Gimble, CAAT/Enhancer Binding Proteins Directly Modulate Transcription from the Peroxisome Proliferator- Activated Receptor γ2 Promoter, Biochem. Biophys. Res. Commun. 240 (1997) 99–103, https://doi.org/10.1006/bbrc.1997.7627.
[64] R.J. Christy, K.H. Kaestner, D.E. Geiman, M.D. Lane, CCAAT/enhancer binding protein gene promoter: binding of nuclear factors during differentiation of 3T3-L1 preadipocytes, Proc. Natl. Acad. Sci. U. S. A. 88 (1991) 2593–2597 http://www.ncbi.nlm.nih.gov/pmc/articles/PMC51279/.
[65] Z. Wu, E.D. Rosen, R. Brun, S. Hauser, G. Adelmant, A.E. Troy, C. McKeon, G.J. Darlington, B.M. Spiegelman, Cross-Regulation of C/EBPα and PPARγ Controls the Transcriptional Pathway of Adipogenesis and Insulin Sensitivity, Mol. Cell 3 (1999) 151–158, https://doi.org/10.1016/S1097-2765(00)80306-8.
[66] G. Elberg, J.M. Gimble, S.Y. Tsai, Modulation of the Murine Peroxisome Proliferator-Activated Receptorγ2 Promoter Activity by CCAAT/Enhancer Binding Proteins, J. Biol. Chem. (2000), https://doi.org/10.1074/jbc.M003593200.
[67] Y. Zuo, L. Qiang, S.R. Farmer, Activation of CCAAT/Enhancer-binding Protein (C/EBP) α Expression by C/EBPβ during Adipogenesis Requires a Peroxisome Proliferator-activated Receptor-γ-associated Repression of HDAC1 at the C/ebpα Gene Promoter, J. Biol. Chem. 281 (2006) 7960–7967, https://doi.org/10.1074/jbc.M510682200.
[68] Y. Oishi, I. Manabe, K. Tobe, K. Tsushima, T. Shindo, K. Fujiu, G. Nishimura, K. Maemura, T. Yamauchi, N. Kubota, R. Suzuki, T. Kitamura, S. Akira, T. Kadowaki, R. Nagai, Krüppel-like transcription factor KLF5 is a key regulator of adipocyte differentiation, Cell Metab. 1 (2005) 27–39, https://doi.org/10.1016/j.cmet.2004.11.005.
[69] H. Pei, Y. Yao, Y. Yang, K. Liao, J.-R. Wu, Krüppel-like factor KLF9 regulates PPARγ transactivation at the middle stage of adipogenesis, Cell Death Differ. 18 (2010) 315, https://doi.org/10.1038/cdd.2010.100.
[70] S. Sen Banerjee, M.W. Feinberg, M. Watanabe, S. Gray, R.L. Haspel, D.J. Denkinger, R. Kawahara, H. Hauner, M.K. Jain, The Krüppel-like Factor KLF2 Inhibits Peroxisome Proliferator-activated Receptor-γ Expression and Adipogenesis, J. Biol. Chem. 278 (2003) 2581–2584, https://doi.org/10.1074/jbc.M210859200.
[71] L. Fajas, K. Schoonjans, L. Gelman, J.B. Kim, J. Najib, G. Martin, J.-C. Fruchart, M. Briggs, B.M. Spiegelman, J. Auwerx, Regulation of Peroxisome Proliferator-Activated Receptor γ Expression by Adipocyte Differentiation and Determination Factor 1/Sterol Regulatory Element Binding Protein 1: Implications for Adipocyte Differentiation and Metabolism, Mol. Cell. Biol. 19 (1999) 5495–5503, https://doi.org/10.1128/MCB.19.8.5495.
[72] J.B. Kim, H.M. Wright, M. Wright, B.M. Spiegelman, ADD1/SREBP1 activates PPARγ through the production of endogenous ligand, Proc. Natl. Acad. Sci. 95 (1998) 4333–4337 http://www.pnas.org/content/95/8/4333.abstract.
[73] Q. Tong, G. Dalgin, H. Xu, C.-N. Ting, J.M. Leiden, G.S. Hotamisligil, Function of GATA Transcription Factors in Preadipocyte-Adipocyte Transition, Science (80-.) 290 (2000) 134–138 http://science.sciencemag.org/content/290/5489/134.abstract.
[74] Q. Tong, J. Tsai, G. Tan, G. Dalgin, G.S. Hotamisligil, Interaction between GATA and the C/EBP Family of Transcription Factors Is Critical in GATA-Mediated Suppression of Adipocyte Differentiation, Mol. Cell. Biol. 25 (2005) 706–715, https://doi.org/10.1128/MCB.25.2.706-715.2005.
[75] D.P. Bartel, Metazoan MicroRNAs, Cell. 173 (2018) 20–51, https://doi.org/10.1016/j.cell.2018.03.006.
[76] N. Klöting, S. Berthold, P. Kovacs, M.R. Schön, M. Fasshauer, K. Ruschke, M. Stumvoll, M. Blüher, MicroRNA Expression in Human Omental and Subcutaneous Adipose Tissue, PLoS One 4 (2009) e4699, , https://doi.org/10.1371/journal.pone.0004699.
[77] S.Y. Kim, A.Y. Kim, H.W. Lee, Y.H. Son, G.Y. Lee, J.-W. Lee, Y.S. Lee, J.B. Kim, miR-27a is a negative regulator of adipocyte differentiation via suppressing PPARγ

expression, Biochem. Biophys. Res. Commun. 392 (2010) 323–328, https://doi.org/10.1016/j.bbrc.2010.01.012.
[78] M. Karbiener, C. Fischer, S. Nowitsch, P. Opriessnig, C. Papak, G. Ailhaud, C. Dani, E.-Z. Amri, M. Scheideler, microRNA miR-27b impairs human adipocyte differentiation and targets PPARγ, Biochem. Biophys. Res. Commun. 390 (2009) 247–251, https://doi.org/10.1016/j.bbrc.2009.09.098.
[79] E.K. Lee, M.J. Lee, K. Abdelmohsen, W. Kim, M.M. Kim, S. Srikantan, J.L. Martindale, E.R. Hutchison, H.H. Kim, B.S. Marasa, R. Selimyan, J.M. Egan, S.R. Smith, S.K. Fried, M. Gorospe, miR-130 Suppresses Adipogenesis by Inhibiting Peroxisome Proliferator-Activated Receptor γ Expression, Mol. Cell. Biol. 31 (2011) 626–638, https://doi.org/10.1128/MCB.00894-10.
[80] J. Byung-Chul, K. In-Hong, K. Jeong-Tae, MicroRNA-302a inhibits adipogenesis by suppressing peroxisome proliferator-activated receptor γ expression, FEBS Lett. 588 (2014) 3427–3434, https://doi.org/10.1016/j.febslet.2014.07.035.
[81] L. Chen, J. Hou, L. Ye, Y. Chen, J. Cui, W. Tian, C. Li, L. Liu, MicroRNA-143 Regulates Adipogenesis by Modulating the MAP2K5–ERK5 Signaling, Sci. Rep. 4 (2014) 3819, https://doi.org/10.1038/srep03819.
[82] E. John, A. Wienecke-Baldacchino, M. Liivrand, M. Heinäniemi, C. Carlberg, L. Sinkkonen, Dataset integration identifies transcriptional regulation of microRNA genes by PPARγ in differentiating mouse 3T3-L1 adipocytes, Nucleic Acids Res. 40 (2012) 4446–4460, https://doi.org/10.1093/nar/gks025.
[83] F. Rastinejad, P. Huang, V. Chandra, S. Khorasanizadeh, Understanding nuclear receptor form and function using structural biology, J. Mol. Endocrinol. 51 (2013) T1–T21, https://doi.org/10.1530/JME-13-0173.
[84] O. van Beekum, V. Fleskens, E. Kalkhoven, Posttranslational modifications of PPAR-gamma: fine-tuning the metabolic master regulator, Obesity (Silver Spring) 17 (2009) 213–219, https://doi.org/10.1038/oby.2008.473.
[85] V. Chandra, P. Huang, Y. Hamuro, S. Raghuram, Y. Wang, T.P. Burris, F. Rastinejad, Structure of the intact PPAR-gamma-RXR- alfa nuclear receptor complex on DNA, Nature. 456 (2008) 350–356, https://doi.org/10.1038/nature07413.
[86] P. Tontonoz, R.A. Graves, A.I. Budavari, H. Erdjument-Bromage, M. Lui, E. Hu, P. Tempst, B.M. Spiegelman, Adipocyte-specific transcription factor ARF6 is a heterodimeric complex of two nuclear hormone receptors, PPARγ and RXRa, Nucleic Acids Res. 22 (1994) 5628–5634, https://doi.org/10.1093/nar/22.25.5628.
[87] A. Ijpenberg, E. Jeannin, W. Wahli, Nucleic Acids , Protein Synthesis , And Molecular Genetics : Polarity and Specific Sequence Requirements of Peroxisome Proliferator-activated Receptor (PPAR)/ Retinoid X Receptor Heterodimer Binding to DNA : A Functional Analysis Of The Malic Enzyme Gen, 272 (1997), pp. 20108–20117, https://doi.org/10.1074/jbc.272.32.20108.
[88] C. Juge-Aubry, A. Pernin, T. Favez, A.G. Burger, W. Wahli, C.A. Meier, B. Desvergne, DNA Binding Properties of Peroxisome Proliferator-activated Receptor Subtypes on Various Natural Peroxisome Proliferator Response Elements: IMPORTANCE OF THE 5′-FLANKING REGION, J. Biol. Chem. 272 (1997) 25252–25259, https://doi.org/10.1074/jbc.272.40.25252.
[89] S.A. Kliewer, S.S. Sundseth, S.A. Jones, P.J. Brown, G.B. Wisely, C.S. Koble, P. Devchand, W. Wahli, T.M. Willson, J.M. Lenhard, J.M. Lehmann, Fatty acids and eicosanoids regulate gene expression through direct interactions with peroxisome proliferator-activated receptors α and γ, Proc. Natl. Acad. Sci. 94 (1997) 4318–4323 http://www.pnas.org/content/94/9/4318.abstract.
[90] B.M. Forman, P. Tontonoz, J. Chen, R.P. Brun, B.M. Spiegelman, R.M. Evans, 15-Deoxy-Δ12,14-Prostaglandin J2 is a ligand for the adipocyte determination factor PPARγ, Cell. 83 (1995) 803–812, https://doi.org/10.1016/0092-8674(95)90193-0.
[91] S.A. Kliewer, J.M. Lenhard, T.M. Willson, I. Patel, D.C. Morris, J.M. Lehmann, A prostaglandin J2 metabolite binds peroxisome proliferator-activated receptor γ and promotes adipocyte differentiation, Cell. 83 (1995) 813–819, https://doi.org/10.1016/0092-8674(95)90194-9.
[92] L. Nagy, P. Tontonoz, J.G.A. Alvarez, H. Chen, R.M. Evans, Oxidized LDL Regulates Macrophage Gene Expression through Ligand Activation of PPARγ, Cell. 93 (1998) 229–240, https://doi.org/10.1016/S0092-8674(00)81574-3.
[93] L.C. Bell-Parikh, T. Ide, J.A. Lawson, P. McNamara, M. Reilly, G.A. FitzGerald, Biosynthesis of 15-deoxy-Δ12,14-PGJ2 and the ligation of PPARγ, J. Clin. Invest. 112 (2003) 945–955, https://doi.org/10.1172/JCI18012.
[94] R.T. Nolte, G.B. Wisely, S. Westin, J.E. Cobb, M.H. Lambert, R. Kurokawa, M.G. Rosenfeld, T.M. Willson, C.K. Glass, M.V. Milburn, Ligand binding and co-activator assembly of the peroxisome proliferator-activated receptor-gamma, Nature. 395 (1998) 137–143, https://doi.org/10.1038/25931.
[95] B.L. Balint, L. Nagy, Selective Modulators of PPAR Activity as New Therapeutic Tools in Metabolic Diseases, Endocr Metab Immune Disord Drug Targets 6 (2006) 33–43, https://doi.org/10.2174/187153006776056620.
[96] J.M. Lehmann, L.B. Moore, T.A. Smith-Oliver, W.O. Wilkison, T.M. Willson, S.A. Kliewer, An Antidiabetic Thiazolidinedione Is a High Affinity Ligand for Peroxisome Proliferator-activated Receptor γ (PPARγ), J. Biol. Chem. 270 (1995) 12953–12956, https://doi.org/10.1074/jbc.270.22.12953.
[97] I.E. Kelly, T.S. Han, K. Walsh, M.E. Lean, Effects of a thiazolidinedione compound on body fat and fat distribution of patients with type 2 diabetes, Diabetes Care 22 (1999) 288–293 http://care.diabetesjournals.org/content/22/2/288.abstract.
[98] T. Nakamura, T. Funahashi, S. Yamashita, M. Nishida, Y. Nishida, M. Takahashi, K. Hotta, H. Kuriyama, S. Kihara, N. Ohuchi, T. Nishimura, B. Kishino, K. Ishikawa, T. Kawamoto, K. Tokunaga, C. Nakagawa, I. Mineo, F. Watanabe, S. Tarui, Y. Matsuzawa, Thiazolidinedione derivative improves fat distribution and multiple risk factors in subjects with visceral fat accumulation—double-blind placebo-controlled trial, Diabetes Res. Clin. Pract. 54 (2001) 181–190, https://doi.org/10.1016/S0168-8227(01)00319-9.
[99] S. Akazawa, F. Sun, M. Ito, E. Kawasaki, K. Eguchi, Efficacy of troglitazone on body fat distribution in type 2 diabetes, Diabetes Care 23 (2000) 1067–1071 http://care.diabetesjournals.org/content/23/8/1067.abstract.
[100] H. Yki-Järvinen, Thiazolidinediones, N. Engl. J. Med. 351 (2004) 1106–1118, https://doi.org/10.1056/NEJMra041001.
[101] R.E. Soccio, E.R. Chen, M.A. Lazar, Thiazolidinediones and the promise of insulin sensitization in type 2 diabetes, Cell Metab. 20 (2014) 573–591, https://doi.org/10.1016/j.cmet.2014.08.005.
[102] J.H. Choi, A.S. Banks, J.L. Estall, S. Kajimura, P. Bostrom, D. Laznik, J.L. Ruas, M.J. Chalmers, T.M. Kamenecka, M. Bluher, P.R. Griffin, B.M. Spiegelman, Anti-diabetic drugs inhibit obesity-linked phosphorylation of PPARgamma by Cdk5, Nature. 466 (2010) 451–456, https://doi.org/10.1038/nature09291.
[103] J.H. Choi, A.S. Banks, T.M. Kamenecka, S.A. Busby, M.J. Chalmers, N. Kumar, D.S. Kuruvilla, Y. Shin, Y. He, J.B. Bruning, D.P. Marciano, M.D. Cameron, D. Laznik, M.J. Jurczak, S.C. Schürer, D. Vidović, G.I. Shulman, B.M. Spiegelman, P.R. Griffin, Antidiabetic actions of a non-agonist PPARγ ligand blocking Cdk5-mediated phosphorylation, Nature. 477 (2011) 477, https://doi.org/10.1038/nature10383.
[104] A.S. Banks, F.E. McAllister, J.P.G. Camporez, P.-J.H. Zushin, M.J. Jurczak, D. Laznik-Bogoslavski, G.I. Shulman, S.P. Gygi, B.M. Spiegelman, An ERK/Cdk5 axis controls the diabetogenic actions of PPARγ, Nature. 517 (2014) 391, https://doi.org/10.1038/nature13887.
[105] L. Qiang, L. Wang, N. Kon, W. Zhao, S. Lee, Y. Zhang, M. Rosenbaum, Y. Zhao, W. Gu, S.R. Farmer, D. Accili, Brown Remodeling of White Adipose Tissue by SirT1-Dependent Deacetylation of Pparγ, Cell. 150 (2012) 620–632, https://doi.org/10.1016/j.cell.2012.06.027.
[106] R. Mayoral, O. Osborn, J. McNelis, A.M. Johnson, D.Y. Oh, C.L. Izquierdo, H. Chung, P. Li, P.G. Traves, G. Bandyopadhyay, A.R. Pessentheiner, J.M. Ofrecio, J.R. Cook, L. Qiang, D. Accili, J.M. Olefsky, Adipocyte SIRT1 knockout promotes PPARγ activity, adipogenesis and insulin sensitivity in chronic-HFD and obesity, Mol. Metab. 4 (2015) 378–391, https://doi.org/10.1016/j.molmet.2015.02.007.
[107] M.J. Kraakman, Q. Liu, J. Postigo-Fernandez, R. Ji, N. Kon, D. Larrea, M. Namwanje, L. Fan, M. Chan, E. Area-Gomez, W. Fu, R.J. Creusot, L. Qiang, PPARγ deacetylation dissociates thiazolidinedione's metabolic benefits from its adverse effects, J. Clin. Invest. 128 (2018), https://doi.org/10.1172/JCI98709.
[108] Y. Daisuke, Y. Tomohiro, S. Makoto, N. Nagisa, H. Fumiko, O. Takashi, The transactivating function of peroxisome proliferator-activated receptor γ is negatively regulated by SUMO conjugation in the amino-terminal domain, Genes Cells 9 (2004) 1017–1029, https://doi.org/10.1111/j.1365-2443.2004.00786.x.
[109] F.Z. Elizabeth, S.J. M., Control of Peroxisome Proliferator-Activated Receptor γ2 Stability and Activity by SUMOylation, Obes. Res. 12 (2012) 921–928, https://doi.org/10.1038/oby.2004.112.
[110] M. Shimizu, D. Yamashita, T. Yamaguchi, F. Hirose, T. Osumi, Aspects of the regulatory mechanisms of PPAR functions: Analysis of a bidirectional response element and regulation by sumoylation, Mol. Cell. Biochem. 286 (2006) 33, https://doi.org/10.1007/s11010-005-9052-z.
[111] T. Ohshima, H. Koga, K. Shimotohno, Transcriptional Activity of Peroxisome Proliferator-activated Receptor γ Is Modulated by SUMO-1 Modification, J. Biol. Chem. 279 (2004) 29551–29557, https://doi.org/10.1074/jbc.M403866200.
[112] S. Ji, S.Y. Park, J. Roth, H.S. Kim, J.W. Cho, O-GlcNAc modification of PPARγ reduces its transcriptional activity, Biochem. Biophys. Res. Commun. 417 (2012) 1158–1163, https://doi.org/10.1016/j.bbrc.2011.12.086.
[113] S. Hauser, G. Adelmant, P. Sarraf, H.M. Wright, E. Mueller, B.M. Spiegelman, Degradation of the Peroxisome Proliferator-activated Receptor γ Is Linked to Ligand-dependent Activation, J. Biol. Chem. 275 (2000) 18527–18533, https://doi.org/10.1074/jbc.M001297200.
[114] K.J. Waite, Z.E. Floyd, P. Arbour-Reily, J.M. Stephens, Interferon-γ-induced Regulation of Peroxisome Proliferator-activated Receptor γ and STATs in Adipocytes, J. Biol. Chem. 276 (2001) 7062–7068, https://doi.org/10.1074/jbc.M007894200.
[115] Z.E. Floyd, J.M. Stephens, Interferon-γ-mediated Activation and Ubiquitin-Proteasome-dependent Degradation of PPARγ in Adipocytes, J. Biol. Chem. 277 (2002) 4062–4068, https://doi.org/10.1074/jbc.M108473200.
[116] E. Lau, D. Carvalho, J. Oliveira, S. Fernandes, P. Freitas, Familial partial lipodystrophy type 3: a new mutation on the PPARG gene, Horm. 14 (2015) 317–320 http://www.ncbi.nlm.nih.gov/pubmed/26158656.
[117] M. Auclair, C. Vigouroux, F. Boccara, E. Capel, C. Vigeral, B. Guerci, O. Lascols, J. Capeau, M. Caron-Debarle, Peroxisome proliferator-activated receptor-γ mutations responsible for lipodystrophy with severe hypertension activate the cellular renin-angiotensin system, Arterioscler. Thromb. Vasc. Biol. 33 (2013) 829–838, https://doi.org/10.1161/ATVBAHA.112.300962.
[118] A. Lüdtke, J. Buettner, W. Wu, A. Muchir, A. Schroeter, S. Zinn-Justin, S. Spuler, H.H.-J. Schmidt, H.J. Worman, Peroxisome Proliferator-Activated Receptor-γ C190S Mutation Causes Partial Lipodystrophy, J. Clin. Endocrinol. Metab. 92 (2007) 2248–2255, https://doi.org/10.1210/jc.2005-2624.
[119] H. Monajemi, L. Zhang, G. Li, E.H. Jeninga, H. Cao, M. Maas, C.B. Brouwer, E. Kalkhoven, E. Stroes, R.A. Hegele, T. Leff, Familial partial lipodystrophy phenotype resulting from a single-base mutation in deoxyribonucleic acid-binding domain of peroxisome proliferator-activated receptor-gamma, J. Clin. Endocrinol. Metab. 92 (2007) 1606–1612, https://doi.org/10.1210/jc.2006-1807.
[120] M. Agostini, E. Schoenmakers, J. Beig, L. Fairall, I. Szatmari, O. Rajanayagam, F.W. Muskett, C. Adams, A.D. Marais, S. O'Rahilly, R.K. Semple, L. Nagy, A.R. Majithia, J.W.R. Schwabe, D.J. Blom, R. Murphy, K. Chatterjee, D.B. Savage, A Pharmacogenetic Approach to the Treatment of Patients with PPARG Mutations, Diabetes. 67 (2018) 1086–1092 http://diabetes.diabetesjournals.org/content/early/2018/04/02/db17-1236.abstract.

[121] K. Miehle, J. Porrmann, D. Mitter, M. Stumvoll, C. Glaser, M. Fasshauer, K. Hoffmann, Novel peroxisome proliferator-activated receptor gamma mutation in a family with familial partial lipodystrophy type 3, Clin. Endocrinol. 84 (2016) 141–148, https://doi.org/10.1111/cen.12837.
[122] A.L. Castell, S. Hiéronimus, O. Lascols, T. Fournier, P. Fénichel, Vascular placental abnormalities and newborn death in a pregnant diabetic woman with familial partial lipodystrophy type 3: a possible role for peroxisome proliferator-activated receptor γ, Diabetes Metab. 38 (2012) 367–369, https://doi.org/10.1016/j.diabet.2012.02.012.
[123] G.A. Francis, G. Li, R. Casey, J. Wang, H. Cao, T. Leff, R.A. Hegele, Peroxisomal proliferator activated receptor-γ deficiency in a Canadian kindred with familial partial lipodystrophy type 3 (FPLD3), BMC Med. Genet. 7 (2006) 3, , https://doi.org/10.1186/1471-2350-7-3.
[124] R.A. Hegele, H. Cao, C. Frankowski, S.T. Mathews, T. Leff, PPARG F388L, a Transactivation-Deficient Mutant, in Familial Partial Lipodystrophy, Diabetes. 51 (2002) 3586–3590 http://diabetes.diabetesjournals.org/content/51/12/3586.abstract.
[125] A. Lüdtke, J. Buettner, H.H.-J. Schmidt, H.J. Worman, New PPARG mutation leads to lipodystrophy and loss of protein function that is partially restored by a synthetic ligand, J. Med. Genet. 44 (2007) e88, https://doi.org/10.1136/jmg.2007.050567.
[126] A.K. Agarwal, A. Garg, A Novel Heterozygous Mutation in Peroxisome Proliferator-Activated Receptor-γ Gene in a Patient with Familial Partial Lipodystrophy, J. Clin. Endocrinol. Metab. 87 (2002) 408, https://doi.org/10.1210/jcem.87.1.8290.
[127] J. Guettier, J.Y. Park, E.K. Cochran, C. Poitou, M. Meier, K. Clément, J. Magré, P. Gorden, U.E. Paris, U. Pierre, C. De Recherche, Leptin therapy for partial lipodystrophy linked to a PPAR-γ mutation, 68 (2008), pp. 547–554, https://doi.org/10.1111/j.1365-2265.2007.03095.x.Leptin.
[128] M.F. Broekema, M.P.G. Massink, C. Donato, J. de Ligt, J. Schaarschmidt, A. Borgman, M.G. Schooneman, D. Melchers, M.N. Gerding, R. Houtman, A.M.J.J. Bonvin, A.R. Majithia, H. Monajemi, G.W. van Haaften, M.R. Soeters, E. Kalkhoven, Natural helix 9 mutants of PPARγ differently affect its transcriptional activity, Mol. Metab. (2018), https://doi.org/10.1016/j.molmet.2018.12.005.
[129] E.L. Sorkina, M.F. Kalashnikova, N.V. Likhodey, E.O. Koksharova, D.V. Ustyuzhanin, A.Y. Mayorov, M.V. Shestakova, A.N. Tiulpakov, Development of metabolic syndrome at a young age as a manifestation of familial partial lipodystrophy type 3 (PPARG mutation): the first description of its clinical case in Russia, Diabetes Mellit. 18 (2015) 99, https://doi.org/10.14341/DM2015399-105.
[130] K. Al-Shali, H. Cao, N. Knoers, A.R. Hermus, C.J. Tack, R. a Hegele, A single-base mutation in the peroxisome proliferator-activated receptor gamma4 promoter associated with altered in vitro expression and partial lipodystrophy, J. Clin. Endocrinol. Metab. 89 (2004) 5655–5660, https://doi.org/10.1210/jc.2004-0280.
[131] R.A. Hegele, E. Ur, T.P. Ransom, H. Cao, A frameshift mutation in peroxisome-proliferator-activated receptor-gamma in familial partial lipodystrophy subtype 3 (FPLD3; MIM 604367), Clin. Genet. 70 (2006) 360–362, https://doi.org/10.1111/j.1399-0004.2006.00674.x.
[132] M. Agostini, E. Schoenmakers, C. Mitchell, I. Szatmari, D. Savage, A. Smith, O. Rajanayagam, R. Semple, J. Luan, L. Bath, A. Zalin, M. Labib, S. Kumar, H. Simpson, D. Blom, D. Marais, J. Schwabe, I. Barroso, R. Trembath, N. Wareham, L. Nagy, M. Gurnell, S. O'Rahilly, K. Chatterjee, Non-DNA binding, dominant-negative, human PPARγ mutations cause lipodystrophic insulin resistance, Cell Metab. 4 (2006) 303–311, https://doi.org/10.1016/j.cmet.2006.09.003.
[133] M.E. Visser, E. Kropman, M.E. Kranendonk, N. Hamers a Koppen, E.S. Stroes, E. Kalkhoven, H. Monajemi, Characterisation of non-obese diabetic patients with marked insulin resistance identifies a novel familial partial lipodystrophy-associated PPARγ mutation (Y151C), Diabetologia. 54 (2011) 1639–1644, https://doi.org/10.1007/s00125-011-2142-4.
[134] B. Akinci, H. Onay, T. Demir, S. Ozen, H. Kayserili, G. Akinci, B. Nur, B. Tuysuz, M.N. Ozbek, A. Gungor, I.Y. Simsir, C. Altay, L. Demir, E. Simsek, M. Atmaca, H. Topaloglu, H. Bilen, H. Atmaca, T. Atik, U. Cavdar, U. Altunoglu, A. Aslanger, E. Mihci, M. Secil, F. Saygili, A. Comlekci, A. Garg, Natural history of congenital generalized lipodystrophy: A nationwide study from Turkey, J. Clin. Endocrinol. Metab. 101 (2016) 2759–2767, https://doi.org/10.1210/jc.2016-1005.
[135] P.M. Campeau, O. Astapova, R. Martins, J. Bergeron, P. Couture, R. a Hegele, T. Leff, C. Gagné, Clinical and molecular characterization of a severe form of partial lipodystrophy expanding the phenotype of PPARγ deficiency, J. Lipid Res. 53 (2012) 1968–1978, https://doi.org/10.1194/jlr.P025437.
[136] T. Tchkonia, N. Giorgadze, T. Pirtskhalava, Y. Tchoukalova, I. Karagiannides, R.A. Forse, M. DePonte, M. Stevenson, W. Guo, J. Han, G. Waloga, T.L. Lash, M.D. Jensen, J.L. Kirkland, Fat depot origin affects adipogenesis in primary cultured and cloned human preadipocytes, Am. J. Physiol. Integr. Comp. Physiol. 282 (2002) R1286–R1296, https://doi.org/10.1152/ajpregu.00653.2001.
[137] E.H. Jeninga, M. Gurnell, E. Kalkhoven, Functional implications of genetic variation in human PPARγ, Trends Endocrinol. Metab. 20 (2009) 380–387, https://doi.org/10.1016/j.tem.2009.04.005.
[138] R.A. Hegele, T.R. Joy, S. a Al-Attar, B.K. Rutt, Thematic review series: Adipocyte Biology. Lipodystrophies: windows on adipose biology and metabolism, J. Lipid Res. 48 (2007) 1433–1444, https://doi.org/10.1194/jlr.R700004-JLR200.
[139] E.H. Jeninga, O. van Beekum, A.D.J. van Dijk, N. Hamers, B.I. Hendriks-Stegeman, A.M.J.J. Bonvin, R. Berger, E. Kalkhoven, Impaired peroxisome proliferator-activated receptor gamma function through mutation of a conserved salt bridge (R425C) in familial partial lipodystrophy, Mol. Endocrinol. 21 (2007) 1049–1065, https://doi.org/10.1210/me.2006-0485.
[140] M. Claussnitzer, S.N.N. Dankel, B. Klocke, H. Grallert, V. Glunk, T. Berulava, H. Lee, N. Oskolkov, J. Fadista, K. Ehlers, S. Wahl, C. Hoffmann, K. Qian, T. Rönn, H. Riess, M. Müller-Nurasyid, N. Bretschneider, T. Schroeder, T. Skurk, B. Horsthemke, B.F. Voight, L.J. Scott, V. Steinthorsdottir, A.D.A.P. Morris, C. Dina, R.P. Welch, E. Zeggini, C. Huth, Y.S. Aulchenko, G. Thorleifsson, L.J. McCulloch, T. Ferreira, H. Grallert, N. Amin, G. Wu, C.J. Willer, S. Raychaudhuri, S.A. McCarroll, C. Langenberg, O.M. Hofmann, J. Dupuis, L. Qi, A.V. Segrè, M. van Hoek, P. Navarro, K. Ardlie, B. Balkau, R. Benediktsson, A.J. Bennett, R. Blagieva, E. Boerwinkle, L.L. Bonnycastle, K.B. Boström, B. Bravenboer, S. Bumpstead, N.P. Burtt, G. Charpentier, P.S. Chines, M. Cornelis, D.J. Couper, G. Crawford, A.S.F. Doney, K.S. Elliott, A.L. Elliott, M.R. Erdos, C.S. Fox, C.S. Franklin, M. Ganser, C. Gieger, N. Grarup, T. Green, S. Griffin, C.J. Groves, C. Guiducci, S. Hadjadj, N. Hassanali, C. Herder, B. Isomaa, A.U. Jackson, P.R.V. Johnson, T. Jørgensen, W.H.L. Kao, N. Klopp, A. Kong, P. Kraft, J. Kuusisto, T. Lauritzen, M. Li, A. Lieverse, C.M. Lindgren, V. Lyssenko, M. Marre, T. Meitinger, K. Midthjell, M.A. Morken, N. Narisu, P. Nilsson, K.R. Owen, F. Payne, J.R.B. Perry, A.-K. Petersen, C. Platou, C. Proença, I. Prokopenko, W. Rathmann, N.W. Rayner, N.R. Robertson, G. Rocheleau, M. Roden, M.J. Sampson, R. Saxena, B.M. Shields, P. Shrader, G. Sigurdsson, T. Sparsø, K. Strassburger, H.M. Stringham, Q. Sun, A.J. Swift, B. Thorand, J. Tichet, T. Tuomi, R.M. van Dam, T.W. van Haeften, T. van Herpt, J.V. van Vliet-Ostaptchouk, G.B. Walters, M.N. Weedon, C. Wijmenga, J. Witteman, R.N. Bergman, S. Cauchi, F.S. Collins, A.L. Gloyn, U. Gyllensten, T. Hansen, W.A. Hide, G.A. Hitman, A. Hofman, D.J. Hunter, K. Hveem, M. Laakso, K.L. Mohlke, A.D.A.P. Morris, C.N.A. Palmer, P.P. Pramstaller, I. Rudan, E. Sijbrands, L.D. Stein, J. Tuomilehto, A. Uitterlinden, M. Walker, N.J. Wareham, R.M. Watanabe, G.R. Abecasis, B.O. Boehm, H. Campbell, M.J. Daly, A.T. Hattersley, F.B. Hu, J.B. Meigs, J.S. Pankow, O. Pedersen, H.-E. Wichmann, I. Barroso, J.C. Florez, T.M. Frayling, L. Groop, R. Sladek, U. Thorsteinsdottir, J.F. Wilson, T. Illig, P. Froguel, C.M. van Duijn, K. Stefansson, D. Altshuler, M. Boehnke, M.I. McCarthy, D. Spieler, M. Klingenspor, M. Seifert, M.J. Kern, N. Mejhert, I. Dahlman, O. Hansson, S.M. Hauck, M. Blüher, P. Arner, L. Groop, T. Illig, K. Suhre, Y.-H.H. Hsu, G. Mellgren, H. Hauner, H. Laumen, Leveraging Cross-Species Transcription Factor Binding Site Patterns: From Diabetes Risk Loci to Disease Mechanisms, Cell. 156 (2014) 343–358, https://doi.org/10.1016/j.cell.2013.10.058.
[141] Y.L. Muller, C. Bogardus, B.A. Beamer, A.R. Shuldiner, L.J. Baier, A Functional Variant in the Peroxisome Proliferator-Activated Receptor γ2 Promoter Is Associated With Predictors of Obesity and Type 2 Diabetes in Pima Indians, Diabetes. 52 (2003) 1864 LP–1871 http://diabetes.diabetesjournals.org/content/52/7/1864.abstract.
[142] A. Meirhaeghe, L. Fajas, F. Gouilleux, D. Cottel, N. Helbecque, J. Auwerx, P. Amouyel, A functional polymorphism in a STAT5B site of the human PPAR gamma 3 gene promoter affects height and lipid metabolism in a French population, Arterioscler. Thromb. Vasc. Biol. 23 (2003) 289–294.
[143] A. Meirhaeghe, M.W.T. Tanck, L. Fajas, C. Janot, N. Helbecque, D. Cottel, J. Auwerx, P. Amouyel, J. Dallongeville, Study of a new PPARγ2 promoter polymorphism and haplotype analysis in a French population, Mol. Genet. Metab. 85 (2005) 140–148, https://doi.org/10.1016/j.ymgme.2005.02.004.
[144] D. Drogan, H. Boeing, J. Janke, B. Schmitt, Y. Zhou, J. Walter, T. Pischon, S. Tierling, Regional distribution of body fat in relation to DNA methylation within the LPL, ADIPOQ and PPARγ promoters in subcutaneous adipose tissue, Nutr. & Amp; Diabetes. 5 (2015) e168, https://doi.org/10.1038/nutd.2015.19.
[145] A. Vidal-Puig, M. Jimenez-Liñan, B.B. Lowell, A. Hamann, E. Hu, B. Spiegelman, J.S. Flier, D.E. Moller, Regulation of PPAR gamma gene expression by nutrition and obesity in rodents, J. Clin. Invest. 97 (1996) 2553–2561, https://doi.org/10.1172/JCI118703.
[146] A.J. Vidal-Puig, R.V. Considine, M. Jimenez-Liñan, A. Werman, W.J. Pories, J.F. Caro, J.S. Flier, Peroxisome proliferator-activated receptor gene expression in human tissues. Effects of obesity, weight loss, and regulation by insulin and glucocorticoids, J. Clin. Invest. 99 (1997) 2416–2422, https://doi.org/10.1172/JCI119424.
[147] P. Corrales, A. Vidal-Puig, G. Medina-Gómez, PPARs and Metabolic Disorders Associated with Challenged Adipose Tissue Plasticity, Int. J. Mol. Sci. 19 (2018), https://doi.org/10.3390/ijms19072124.
[148] D.B. Savage, G.D. Tan, C.L. Acerini, S.A. Jebb, M. Agostini, M. Gurnell, R.L. Williams, A.M. Umpleby, E.L. Thomas, J.D. Bell, A.K. Dixon, F. Dunne, R. Boiani, S. Cinti, A. Vidal-Puig, F. Karpe, V.K.K. Chatterjee, S. O'Rahilly, Human Metabolic Syndrome Resulting From Dominant-Negative Mutations in the Nuclear Receptor Peroxisome Proliferator-Activated Receptor-γ, Diabetes. 52 (2003) 910–917 http://diabetes.diabetesjournals.org/content/52/4/910.abstract.
[149] M. Madhra, R.M. Noh, N.N. Zammitt, A.W. Patrick, C.D.B. Love, A complicated pregnancy in a patient with lipodystrophic diabetes attributable to a peroxisome proliferator-activated receptor gamma (PPARG) mutation, Diabet. Med. 29 (2012) e398–e401, https://doi.org/10.1111/j.1464-5491.2012.03742.x.
[150] M.C. Vantyghem, D. Vincent-Desplanques, F. Defrance-Faivre, J. Capeau, C. Fermon, A.S. Valat, O. Lascols, A.C. Hecart, P. Pigny, B. Delemer, C. Vigouroux, J.L. Wemeau, Fertility and obstetrical complications in women with LMNA-related familial partial lipodystrophy, J. Clin. Endocrinol. Metab. 93 (2008), https://doi.org/10.1210/jc.2007-2521.
[151] V.K.K. Chatterjee, Resistance to thyroid hormone, and peroxisome-proliferator-activated receptor γ resistance, Biochem. Soc. Trans. 29 (2001) 227–230 http://www.biochemsoctrans.org/content/29/2/227.abstract.
[152] P.M. Catalano, S.E. Nizielski, J. Shao, L. Preston, L. Qiao, J.E. Friedman, Downregulated IRS-1 and PPARγ in obese women with gestational diabetes: relationship to FFA during pregnancy, Am. J. Physiol. Metab. 282 (2002) E522–E533, https://doi.org/10.1152/ajpendo.00124.2001.
[153] Y. Vivas, M. Díez-Hochleitner, A. Izquierdo-Lahuerta, P. Corrales, D. Horrillo,

I. Velasco, C. Martínez-García, M. Campbell, J. Sevillano, M. Ricote, M. Ros, M.P. Ramos, G. Medina-Gomez, Peroxisome Proliferator-Activated Receptor γ 2 Modulates Late-Pregnancy Homeostatic Metabolic Adaptations, Mol. Med. 22 (2016) 724–736, https://doi.org/10.2119/molmed.2015.00262.
[154] Y. Barak, M.C. Nelson, E.S. Ong, Y.Z. Jones, P. Ruiz-Lozano, K.R. Chien, A. Koder, R.M. Evans, PPARγ Is Required for Placental, Cardiac, and Adipose Tissue Development, Mol. Cell 4 (1999) 585–595, https://doi.org/10.1016/S1097-2765(00)80209-9.
[155] N. Al-Jameil, F. Aziz Khan, M. Fareed Khan, H. Tabassum, A Brief Overview of Preeclampsia, J. Clin. Med. Res. 6 (2014) 1–7, https://doi.org/10.4021/jocmr1682w.
[156] L.M. Pérez, H. Pareja-Galeano, F. Sanchis-Gomar, E. Emanuele, A. Lucia, B.G. Gálvez, 'Adipaging': ageing and obesity share biological hallmarks related to a dysfunctional adipose tissue, J. Physiol. 594 (2016) 3187–3207, https://doi.org/10.1113/JP271691.
[157] T. Tchkonia, T. Thomou, Y. Zhu, I. Karagiannides, C. Pothoulakis, M.D. Jensen, J.L. Kirkland, Mechanisms and metabolic implications of regional differences among fat depots, Cell Metab. 17 (2013) 644–656, https://doi.org/10.1016/j.cmet.2013.03.008.
[158] S.S. Guo, C. Zeller, W.C. Chumlea, R.M. Siervogel, Aging, body composition, and lifestyle: the Fels Longitudinal Study, Am. J. Clin. Nutr. 70 (1999) 405–411, https://doi.org/10.1093/ajcn/70.3.405.
[159] K.L. Spalding, E. Arner, P.O. Westermark, S. Bernard, B.A. Buchholz, O. Bergmann, L. Blomqvist, J. Hoffstedt, E. Näslund, T. Britton, H. Concha, M. Hassan, M. Rydén, J. Frisén, P. Arner, Dynamics of fat cell turnover in humans, Nature. 453 (2008) 783.
[160] B. ML, M. KJ, L. JA, et al., Association between adiposity in midlife and older age and risk of diabetes in older adults, JAMA. 303 (2010) 2504–2512, https://doi.org/10.1001/jama.2010.843.
[161] N. Lakowa, N. Trieu, G. Flehmig, T. Lohmann, M.R. Schön, A. Dietrich, P.H. Zeplin, S. Langer, M. Stumvoll, M. Blüher, N. Klöting, Telomere length differences between subcutaneous and visceral adipose tissue in humans, Biochem. Biophys. Res. Commun. 457 (2015) 426–432, https://doi.org/10.1016/j.bbrc.2014.12.122.
[162] G. Caso, M.A. Mcnurlan, I. Mileva, A. Zemlyak, D.C. Mynarcik, M.C. Gelato, Peripheral Fat Loss and Decline in Adipogenesis in Older Humans, Metabolism. 62 (2013) 337–340, https://doi.org/10.1016/j.metabol.2012.08.007.
[163] I. Karagiannides, T. Tchkonia, D.E. Dobson, C.M. Steppan, P. Cummins, G. Chan, K. Salvatori, M. Hadzopoulou-Cladaras, J.L. Kirkland, Altered expression of C/EBP family members results in decreased adipogenesis with aging, Am. J. Physiol. Integr. Comp. Physiol. 280 (2001) R1772–R1780, https://doi.org/10.1152/ajpregu.2001.280.6.R1772.
[164] K. Hotta, N.L. Bodkin, T.A. Gustafson, S. Yoshioka, H.K. Ortmeyer, B.C. Hansen, Age-related adipose tissue mRNA expression of ADD1/SREBP1, PPARgamma, lipoprotein lipase, and GLUT4 glucose transporter in rhesus monkeys, J. Gerontol. A Biol. Sci. Med. Sci. 54 (1999) B183–B188.
[165] P. Ye, X. Zhang, Z. Wang, C. Zhang, Effect of Aging on the Expression of Peroxisome Proliferator-Activated Receptor γ and the Possible Relation to Insulin Resistance, Gerontology. 52 (2006) 69–75, https://doi.org/10.1159/000090951.
[166] M.A. Mori, P. Raghavan, T. Thomou, J. Boucher, S. Robida-Stubbs, Y. Macotela, S.J. Russell, J.L. Kirkland, T.K. Blackwell, C.R. Kahn, Role of MicroRNA Processing in Adipose Tissue in Stress Defense and Longevity, Cell Metab. 16 (2012) 336–347, https://doi.org/10.1016/j.cmet.2012.07.017.
[167] M.A. Mori, T. Thomou, J. Boucher, K.Y. Lee, S. Lallukka, J.K. Kim, M. Torriani, H. Yki-Järvinen, S.K. Grinspoon, A.M. Cypess, C.R. Kahn, Altered miRNA processing disrupts brown/white adipocyte determination and associates with lipodystrophy, J. Clin. Invest. 124 (2014) 3339–3351, https://doi.org/10.1172/JCI73468.
[168] M. Torriani, S. Srinivasa, K.V. Fitch, T. Thomou, K. Wong, E. Petrow, C.R. Kahn, A.M. Cypess, S.K. Grinspoon, Dysfunctional Subcutaneous Fat With Reduced Dicer and Brown Adipose Tissue Gene Expression in HIV-Infected Patients, J. Clin. Endocrinol. Metab. 101 (2016) 1225–1234, https://doi.org/10.1210/jc.2015-3993.
[169] R. Mudhasani, A.N. Imbalzano, S.N. Jones, An essential role for Dicer in adipocyte differentiation, J. Cell. Biochem. 110 (2010) 812–816, https://doi.org/10.1002/jcb.22625.
[170] C.-J. Yen, B.A. Beamer, C. Negri, K. Silver, K.A. Brown, D.P. Yarnall, D.K. Burns, J. Roth, A.R. Shuldiner, Molecular Scanning of the Human Peroxisome Proliferator Activated Receptor γ (hPPARγ) Gene in Diabetic Caucasians: Identification of a Pro12Ala PPARγ2 Missense Mutation, Biochem. Biophys. Res. Commun. 241 (1997) 270–274, https://doi.org/10.1006/bbrc.1997.7798.
[171] M. Lek, K.J. Karczewski, E.V. Minikel, K.E. Samocha, E. Banks, T. Fennell, A.H. O'Donnell-Luria, J.S. Ware, A.J. Hill, B.B. Cummings, T. Tukiainen, D.P. Birnbaum, J.A. Kosmicki, L.E. Duncan, K. Estrada, F. Zhao, J. Zou, E. Pierce-Hoffman, J. Berghout, D.N. Cooper, N. Deflaux, M. DePristo, R. Do, J. Flannick, M. Fromer, L. Gauthier, J. Goldstein, N. Gupta, D. Howrigan, A. Kiezun, M.I. Kurki, A.L. Moonshine, P. Natarajan, L. Orozco, G.M. Peloso, R. Poplin, M.A. Rivas, V. Ruano-Rubio, S.A. Rose, D.M. Ruderfer, K. Shakir, P.D. Stenson, C. Stevens, B.P. Thomas, G. Tiao, M.T. Tusie-Luna, B. Weisburd, H.-H. Won, D. Yu, D.M. Altshuler, D. Ardissino, M. Boehnke, J. Danesh, S. Donnelly, R. Elosua, J.C. Florez, S.B. Gabriel, G. Getz, S.J. Glatt, C.M. Hultman, S. Kathiresan, M. Laakso, S. McCarroll, M.I. McCarthy, D. McGovern, R. McPherson, B.M. Neale, A. Palotie, S.M. Purcell, D. Saleheen, J.M. Scharf, P. Sklar, P.F. Sullivan, J. Tuomilehto, M.T. Tsuang, H.C. Watkins, J.G. Wilson, M.J. Daly, D.G. MacArthur, E.A. Consortium, Analysis of protein-coding genetic variation in 60,706 humans, Nature 536 (2016) 285–291, https://doi.org/10.1038/nature19057.
[172] D. Altshuler, J.N. Hirschhorn, M. Klannemark, C.M. Lindgren, M.-C. Vohl, J. Nemesh, C.R. Lane, S.F. Schaffner, S. Bolk, C. Brewer, T. Tuomi, D. Gaudet, T.J. Hudson, M. Daly, L. Groop, E.S. Lander, The common PPARγ Pro12Ala polymorphism is associated with decreased risk of type 2 diabetes, Nat. Genet. 26 (2000) 76, https://doi.org/10.1038/79216.
[173] L. Ornella, P. Fabio, P. Rosa, M. Antonio, M. Sandra, C. Marina, M.M. Adelaide, A. Francesco, V. Olga, S. Giorgio, T. Vincenzo, Heterogeneous Effect of Peroxisome Proliferator-activated Receptor γ2 Ala12 Variant on Type 2 Diabetes Risk, Obesity 15 (2012) 1076–1081, https://doi.org/10.1038/oby.2007.617.
[174] S.S. Deeb, L. Fajas, M. Nemoto, J. Pihlajamäki, L. Mykkänen, J. Kuusisto, M. Laakso, W. Fujimoto, J. Auwerx, A Pro12Ala substitution in PPARγ2 associated with decreased receptor activity, lower body mass index and improved insulin sensitivity, Nat. Genet. 20 (1998) 284, https://doi.org/10.1038/3099.
[175] S. Heikkinen, C. Argmann, J.N.J.N. Feige, H. Koutnikova, M.-F.F. Champy, N. Dali-Youcef, E.E. Schadt, M. Laakso, J. Auwerx, The Pro12Ala PPARγ2 Variant Determines Metabolism at the Gene-Environment Interface, Cell Metab. 9 (2009) 88–98, https://doi.org/10.1016/j.cmet.2008.11.007.
[176] S. Masud, S. Ye, Effect of the peroxisome proliferator activated receptor-γ gene Pro12Ala variant on body mass index: a meta-analysis, J. Med. Genet. 40 (2003) 773–780 http://jmg.bmj.com/content/40/10/773.abstract.
[177] A. Doney, B. Fischer, D. Frew, A. Cumming, D.M. Flavell, M. World, H.E. Montgomery, D. Boyle, A. Morris, C.N.A. Palmer, Haplotype analysis of the PPARγ Pro12Ala and C1431T variants reveals opposing associations with body weight, BMC Genet. 3 (2002) 21, https://doi.org/10.1186/1471-2156-3-21.
[178] R.E. Soccio, E.R. Chen, S.R. Rajapurkar, P. Safabakhsh, J.M. Marinis, J.R. Dispirito, M.J. Emmett, E.R. Briggs, B. Fang, L.J. Everett, H.W. Lim, K.J. Won, D.J. Steger, Y. Wu, M. Civelek, B.F. Voight, M.A. Lazar, Genetic Variation Determines PPARγ Function and Anti-diabetic Drug Response in Vivo, Cell. 162 (2015) 33–44, https://doi.org/10.1016/j.cell.2015.06.025.
[179] K. Almind, C.R. Kahn, Genetic Determinants of Energy Expenditure and Insulin Resistance in Diet-Induced Obesity in Mice, Diabetes. 53 (2004) 3274–3285 http://diabetes.diabetesjournals.org/content/53/12/3274.abstract.
[180] S. Virtue, K. Petkevicius, J.M. Moreno-Navarrete, B. Jenkins, D. Hart, M. Dale, A. Koulman, J.M. Fernández-Real, A. Vidal-Puig, Peroxisome Proliferator-Activated Receptor γ2 Controls the Rate of Adipose Tissue Lipid Storage and Determines Metabolic Flexibility, Cell Rep. 24 (2018) 2005–2012.e7, https://doi.org/10.1016/j.celrep.2018.07.063.
[181] K.N. Frayn, Adipose tissue as a buffer for daily lipid flux, Diabetologia 45 (2002) 1201–1210, https://doi.org/10.1007/s00125-002-0873-y.
[182] D.B. Savage, P.R. Murgatroyd, V.K. Chatterjee, S. O'Rahilly, Energy expenditure and adaptive responses to an acute hypercaloric fat load in humans with lipodystrophy, J. Clin. Endocrinol. Metab. 90 (2005) 1446–1452, https://doi.org/10.1210/jc.2004-1494.
[183] J.E. Kim, J. Chen, Regulation of Peroxisome Proliferator–Activated Receptor-γ Activity by Mammalian Target of Rapamycin and Amino Acids in Adipogenesis, Diabetes. 53 (2004) 2748–2756 http://diabetes.diabetesjournals.org/content/53/11/2748.abstract.
[184] P.L. Lee, Y. Tang, H. Li, D.A. Guertin, Raptor/mTORC1 loss in adipocytes causes progressive lipodystrophy and fatty liver disease, Mol. Metab. 5 (2016) 422–432, https://doi.org/10.1016/j.molmet.2016.04.001.
[185] J. Luan, P.O. Browne, A.-H. Harding, D.J. Halsall, S. O'Rahilly, V.K.K. Chatterjee, N.J. Wareham, Evidence for Gene-Nutrient Interaction at the < em > PPAR < / em > γ Locus, Diabetes 50 (2001) 686–689 http://diabetes.diabetesjournals.org/content/50/3/686.abstract.
[186] A. Memisoglu, F.B. Hu, S.E. Hankinson, J.E. Manson, I. De Vivo, W.C. Willett, D.J. Hunter, Interaction between a peroxisome proliferator-activated receptor γ gene polymorphism and dietary fat intake in relation to body mass, Hum. Mol. Genet. 12 (2003) 2923–2929, https://doi.org/10.1093/hmg/ddg318.
[187] J. Robitaille, D. J-P, L. Pérusse, V. M-C, The PPAR-gamma P12A polymorphism modulates the relationship between dietary fat intake and components of the metabolic syndrome: results from the Québec Family Study, Clin. Genet. 63 (2003) 109–116, https://doi.org/10.1034/j.1399-0004.2003.00026.x.
[188] J. Luan, P.O. Browne, A.-H. Harding, D.J. Halsall, S. O'Rahilly, V.K.K. Chatterjee, N.J. Wareham, Evidence for Gene-Nutrient Interaction at the PPARγ Locus, Diabetes 50 (2001) 686–689.
[189] Y.-S. Tsai, H.-J.H.-S. Kim, N. Takahashi, H.-J.H.-S. Kim, J.R. Hagaman, J.K. Kim, N. Maeda, Hypertension and abnormal fat distribution but not insulin resistance in mice with P465L PPARγ, J. Clin. Invest. 114 (2004) 240–249, https://doi.org/10.1172/JCI20964.
[190] S.L. Gray, E. Dalla Nora, J. Grosse, M. Manieri, T. Stoeger, G. Medina-Gomez, K. Burling, S. Wattler, A. Russ, G.S.H. Yeo, V.K. Chatterjee, S. O'Rahilly, P.J. Voshol, S. Cinti, A. Vidal-Puig, Leptin deficiency unmasks the deleterious effects of impaired peroxisome proliferator-activated receptor γ function (P465L PPARγ) in mice, Diabetes. 55 (2006) 2669–2677, https://doi.org/10.2337/db06-0389.
[191] B. Zhang, J. Berger, G. Zhou, A. Elbrecht, S. Biswas, S. White-Carrington, D. Szalkowski, D.E. Moller, Insulin- and Mitogen-activated Protein Kinase-mediated Phosphorylation and Activation of Peroxisome Proliferator-activated Receptor γ, J. Biol. Chem. 271 (1996) 31771–31774, https://doi.org/10.1074/jbc.271.50.31771.
[192] E. Hu, J.B. Kim, P. Sarraf, B.M. Spiegelman, Inhibition of adipogenesis through MAP kinase-mediated phosphorylation of PPARγ, (1997).
[193] P. Li, W. Fan, J. Xu, M. Lu, H. Yamamoto, J. Auwerx, D.D. Sears, S. Talukdar, D. Oh, A. Chen, G. Bandyopadhyay, M. Scadeng, J.M. Ofrecio, S. Nalbandian, J.M. Olefsky, Adipocyte NCoR Knockout Decreases PPARγ Phosphorylation and

Enhances PPARγ Activity and Insulin Sensitivity, Cell. 147 (2011) 815–826, https://doi.org/10.1016/j.cell.2011.09.050.
[194] S. Kajimura, P. Seale, K. Kubota, E. Lunsford, J.V. Frangioni, S.P. Gygi, B.M. Spiegelman, Initiation of myoblast to brown fat switch by a PRDM16-C/EBP-beta transcriptional complex, Nature 460 (2009) 1154–1158, https://doi.org/10.1038/nature08262.
[195] P.A.A. Dutchak, T. Katafuchi, A.L.L. Bookout, J.H.H. Choi, R.T.T. Yu, D.J.J. Mangelsdorf, S.A.A. Kliewer, Fibroblast Growth Factor-21 Regulates PPARγ Activity and the Antidiabetic Actions of Thiazolidinediones, Cell. 148 (2012) 556–567, https://doi.org/10.1016/j.cell.2011.11.062.
[196] A.C. Adams, T. Coskun, C.C. Cheng, L.S. O'Farrell, S.L. DuBois, A. Kharitonenkov, Fibroblast growth factor 21 is not required for the antidiabetic actions of the thiazoladinediones, Mol. Metab. 2 (2013) 205–214, https://doi.org/10.1016/j.molmet.2013.05.005.
[197] R. Keshet, Z. Bryansker Kraitshtein, M. Shanzer, J. Adler, N. Reuven, Y. Shaul, c-Abl tyrosine kinase promotes adipocyte differentiation by targeting PPAR-gamma 2, Proc. Natl. Acad. Sci. 111 (2014) 16365–16370, https://doi.org/10.1073/pnas.1411086111.
[198] M. Ristow, D. Müller-Wieland, A. Pfeiffer, W. Krone, C.R. Kahn, Obesity Associated with a Mutation in a Genetic Regulator of Adipocyte Differentiation, N. Engl. J. Med. 339 (1998) 953–959, https://doi.org/10.1056/NEJM199810013391403.
[199] R.A. Hegele, H. Cao, C. Frankowski, S.T. Mathews, Brief Genetics Report (2002) 51.
[200] E.B. Geer, W. Shen, Gender differences in insulin resistance, body composition, and energy balance, Gend. Med. 6 (Suppl 1) (2009) 60–75, https://doi.org/10.1016/j.genm.2009.02.002.
[201] F. Mauvais-Jarvis, Estrogen and androgen receptors: regulators of fuel homeostasis and emerging targets for diabetes and obesity, Trends Endocrinol. Metab. 22 (2011) 24–33, https://doi.org/10.1016/j.tem.2010.10.002.
[202] P.S. Cooke, A. Naaz, Role of Estrogens in Adipocyte Development and Function, Exp. Biol. Med. 229 (2004) 1127–1135, https://doi.org/10.1177/153537020422901107.
[203] B.F. Palmer, D.J. Clegg, The sexual dimorphism of obesity, Mol. Cell. Endocrinol. 402 (2015) 113–119, https://doi.org/10.1016/j.mce.2014.11.029.
[204] U.A. White, Y.D. Tchoukalova, Sex dimorphism and depot differences in adipose tissue function, Biochim. Biophys. Acta Mol. basis Dis. 1842 (2014) 377–392, https://doi.org/10.1016/j.bbadis.2013.05.006.
[205] G. Perrone, Y. Liu, O. Capri, C. Critelli, F. Barillaro, P. Galoppi, L. Zichella, Evaluation of the Body Composition and Fat Distribution in Long-Term Users of Hormone Replacement Therapy, Gynecol. Obstet. Investig. 48 (1999) 52–55, https://doi.org/10.1159/000010134.
[206] M. Julian, D. Anita, G.B A., Fat Distribution and Insulin Sensitivity in Postmenopausal Women: Influence of Hormone Replacement, Obes. Res. 10 (2012) 424–431, https://doi.org/10.1038/oby.2002.59.
[207] S.B. Pedersen, P.S. Hansen, S. Lund, P.H. Andersen, A. Odgaard, B. Richelsen, Identification of oestrogen receptors and oestrogen receptor mRNA in human adipose tissue, Eur. J. Clin. Investig. 26 (1996) 262–269.
[208] P.S. B., F S., S P., R B., Identification of steroid receptors in human adipose tissue, Eur. J. Clin. Investig. 26 (2018) 1051–1056, https://doi.org/10.1046/j.1365-2362.1996.380603.x.
[209] T. Mizutani, Y. Nishikawa, H. Adachi, T. Enomoto, H. Ikegami, H. Kurachi, T. Nomura, A. Miyake, Identification of estrogen receptor in human adipose tissue and adipocytes, J. Clin. Endocrinol. Metab. 78 (1994) 950–954, https://doi.org/10.1210/jcem.78.4.8157726.
[210] D.L. Crandall, D.E. Busler, T.J. Novak, R.V. Weber, J.G. Kral, Identification of Estrogen Receptor β RNA in Human Breast and Abdominal Subcutaneous Adipose Tissue, Biochem. Biophys. Res. Commun. 248 (1998) 523–526, https://doi.org/10.1006/bbrc.1998.8997.
[211] P.S. Cooke, P.A. Heine, J.A. Taylor, D.B. Lubahn, The role of estrogen and estrogen receptor-α in male adipose tissue, Mol. Cell. Endocrinol. 178 (2001) 147–154, https://doi.org/10.1016/S0303-7207(01)00414-2.
[212] P.A. Heine, J.A. Taylor, G.A. Iwamoto, D.B. Lubahn, P.S. Cooke, Increased adipose tissue in male and female estrogen receptor-α knockout mice, Proc. Natl. Acad. Sci. 97 (2000) 12729–12734 http://www.pnas.org/content/97/23/12729.abstract.
[213] A. Naaz, M. Zakroczymski, P. Heine, J. Taylor, P. Saunders, D. Lubahn, P.S. Cooke, Effect of Ovariectomy on Adipose Tissue of Mice in the Absence of Estrogen Receptor Alpha (ERα): a Potential Role for Estrogen Receptor Beta (ERβ), Horm. Metab. Res. 34 (2002) 758–763, https://doi.org/10.1055/s-2002-38259.
[214] E.P. Smith, J. Boyd, G.R. Frank, H. Takahashi, R.M. Cohen, B. Specker, T.C. Williams, D.B. Lubahn, K.S. Korach, Estrogen Resistance Caused by a Mutation in the Estrogen-Receptor Gene in a Man, N. Engl. J. Med. 331 (1994) 1056–1061, https://doi.org/10.1056/NEJM199410203311604.
[215] S.D. Quaynor, E.W. Stradtman, H.-G. Kim, Y. Shen, L.P. Chorich, D.A. Schreihofer, L.C. Layman, Delayed Puberty and Estrogen Resistance in a Woman with Estrogen Receptor α Variant, N. Engl. J. Med. 369 (2013) 164–171, https://doi.org/10.1056/NEJMoa1303611.
[216] C. Ohlsson, N. Hellberg, P. Parini, O. Vidal, M. Bohlooly, M. Rudling, M.K. Lindberg, M. Warner, B. Angelin, J.-Å. Gustafsson, Obesity and Disturbed Lipoprotein Profile in Estrogen Receptor-α-Deficient Male Mice, Biochem. Biophys. Res. Commun. 278 (2000) 640–645, https://doi.org/10.1006/bbrc.2000.3827.
[217] A. Foryst-Ludwig, M. Clemenz, S. Hohmann, M. Hartge, C. Sprang, N. Frost, M. Krikov, S. Bhanot, R. Barros, A. Morani, J.-Å. Gustafsson, T. Unger, U. Kintscher, Metabolic Actions of Estrogen Receptor Beta (ERβ) are Mediated by a Negative Cross-Talk with PPARγ, PLoS Genet. 4 (2008) e1000108, , https://doi.org/10.1371/journal.pgen.1000108.
[218] K.D. Houston, J.A. Copland, R.R. Broaddus, M.M. Gottardis, S.M. Fischer, C.L. Walker, Inhibition of Proliferation and Estrogen Receptor Signaling by Peroxisome Proliferator-activated Receptor γ Ligands in Uterine Leiomyoma, Cancer Res. 63 (2003) 1221–1227 http://cancerres.aacrjournals.org/content/63/6/1221.abstract.
[219] X. Wang, M.W. Kilgore, Signal cross-talk between estrogen receptor alpha and beta and the peroxisome proliferator-activated receptor gamma1 in MDA-MB-231 and MCF-7 breast cancer cells, Mol. Cell. Endocrinol. 194 (2002) 123–133, https://doi.org/10.1016/S0303-7207(02)00154-5.
[220] D.R. Talbert, C.D. Allred, Y.Y. Zaytseva, M.W. Kilgore, Transactivation of ERα by Rosiglitazone induces proliferation in breast cancer cells, Breast Cancer Res. Treat. 108 (2008) 23–33, https://doi.org/10.1007/s10549-007-9575-y.
[221] Z.-C. Dang, V. Audinot, S.E. Papapoulos, J.A. Boutin, C.W.G.M. Löwik, Peroxisome Proliferator-activated Receptor γ (PPARγ) as a Molecular Target for the Soy Phytoestrogen Genistein, J. Biol. Chem. 278 (2003) 962–967, https://doi.org/10.1074/jbc.M209483200.
[222] H. Keller, F. Givel, M. Perroud, W. Wahli, Signaling cross-talk between peroxisome proliferator-activated receptor/retinoid X receptor and estrogen receptor through estrogen response elements, Mol. Endocrinol. 9 (1995) 794–804, https://doi.org/10.1210/mend.9.7.7476963.
[223] S.B. Nuñez, J.A. Medin, O. Braissant, L. Kemp, W. Wahli, K. Ozato, J.H. Segars, Retinoid X receptor and peroxisome proliferator-activated receptor activate an estrogen responsive gene independent of the estrogen receptor, Mol. Cell. Endocrinol. 127 (1997) 27–40, https://doi.org/10.1016/S0303-7207(96)03980-9.
[224] D. Bonofiglio, S. Gabriele, S. Aquila, S. Catalano, M. Gentile, E. Middea, F. Giordano, S. Andò, Estrogen Receptor α Binds to Peroxisome Proliferator–Activated Receptor Response Element and Negatively Interferes with Peroxisome Proliferator–Activated Receptor γ Signaling in Breast Cancer Cells, Clin. Cancer Res. 11 (2005) 6139–6147 http://clincancerres.aacrjournals.org/content/11/17/6139.abstract.
[225] Q. Xiang, G. Lin, X. Fu, S. Wang, T. Wang, The Role of Peroxisome Proliferator-Activated Receptor-γ and Estrogen Receptors in Genistein-Induced Regulation of Vascular Tone in Female Rat Aortas, Pharmacology. 86 (2010) 117–124, https://doi.org/10.1159/000315065.
[226] M.F. Broekema, D.A.A. Hollman, A. Koppen, H.-J. van den Ham, D. Melchers, D. Pijnenburg, R. Ruijtenbeek, S.W.C. van Mil, R. Houtman, E. Kalkhoven, Profiling Of 3696 Nuclear Receptor-Coregulator Interactions: A Resource For Biological And Clinical Discovery, Endocrinology. (2018), https://doi.org/10.1210/en.2018-00149.
[227] H. Ma, H.W. Sprecher, P.E. Kolattukudy, Estrogen-induced Production of a Peroxisome Proliferator-activated Receptor (PPAR) Ligand in a PPARγ-expressing Tissue, J. Biol. Chem. 273 (1998) 30131–30138, https://doi.org/10.1074/jbc.273.46.30131.
[228] C. Qin, R. Burghardt, R. Smith, M. Wormke, J. Stewart, S. Safe, Peroxisome Proliferator-activated Receptor γ Agonists Induce Proteasome-dependent Degradation of Cyclin D1 and Estrogen Receptor α in MCF-7 Breast Cancer Cells, Cancer Res. 63 (2003) 958–964 http://cancerres.aacrjournals.org/content/63/5/958.abstract.
[229] M. Stéphanie, D. Luce, C. Sophie, B. Louise, P. Frédéric, Aging alters PPARγ in rodent and human adipose tissue by modulating the balance in steroid receptor coactivator-1, Aging Cell 8 (2009) 449–459, https://doi.org/10.1111/j.1474-9726.2009.00490.x.
[230] X. Lingyan, M. Xinran, V.N. Kumar, W. Dongmei, G. Oksana, P.R. L., F. Toren, M. Elisabetta, Ablation of PPARγ in subcutaneous fat exacerbates age-associated obesity and metabolic decline, Aging Cell 17 (2018) e12721, , https://doi.org/10.1111/acel.12721.
[231] M.J. Khandekar, A.S. Banks, D. Laznik-Bogoslavski, J.P. White, J.H. Choi, L. Kazak, J.C. Lo, P. Cohen, K.-K. Wong, T.M. Kamenecka, P.R. Griffin, B.M. Spiegelman, Noncanonical agonist PPARγ ligands modulate the response to DNA damage and sensitize cancer cells to cytotoxic chemotherapy, Proc. Natl. Acad. Sci. 115 (2018) 561 LP–566 http://www.pnas.org/content/115/3/561.abstract.
[232] J. Krstic, I. Reinisch, M. Schupp, T. Schulz, A. Prokesch, p53 Functions in Adipose Tissue Metabolism and Homeostasis, Int. J. Mol. Sci. 19 (2018), https://doi.org/10.3390/ijms19092622.
[233] Z. Liu, L. Jin, J.-K. Yang, B. Wang, K.K.L. Wu, P. Hallenborg, A. Xu, K.K.Y. Cheng, The Dysfunctional MDM2-p53 Axis in Adipocytes Contributes to Ageing Related Metabolic Complications by Induction of Lipodystrophy, Diabetes. 67 (2018) 2397–2409 http://diabetes.diabetesjournals.org/content/early/2018/08/17/db18-0684.abstract.
[234] A. Garg, Gender Differences in the Prevalence of Metabolic Complications in Familial Partial Lipodystrophy (Dunnigan Variety)*, J. Clin. Endocrinol. Metab. 85 (2000) 1776–1782, https://doi.org/10.1210/jcem.85.5.6605.
[235] M. Fu, R. Kazlauskaite, M.D.F.P. Baracho, M.G. Do Nascimento Santos, J. Brandão-Neto, S. Villares, F.S. Celi, B.L. Wajchenberg, A.R. Shuldiner, Mutations in Gng3lg and AGPAT2 in Berardinelli-Seip congenital lipodystrophy and Brunzell syndrome: Phenotype variability suggests important modifier effects, J. Clin. Endocrinol. Metab. 89 (2004) 2916–2922, https://doi.org/10.1210/jc.2003-030485.