Journal of Experimental Marine Biology and Ecology 513 (2019) 47–54

Contents lists available at ScienceDirect

Journal of Experimental Marine Biology and Ecology

journal homepage: www.elsevier.com/locate/jembe

Timing it right: Non-consumptive effects on prey recruitment magnify overtime

Bertolini C.[a,*], Capelle J.J.[b,c], Timmermans K.[a], Bouma T.J.[a], van de Koppel J.[a], Derksen G.C.H.[a,c]

[a] NIOZ Royal Netherlands Institute for Sea Research, Department of Estuarine and Delta Systems, Utrecht University, PO Box 140, 4401 NT Yerseke, the Netherlands
[b] Wageningen University & Research– Wageningen Marine Research, P.O. Box 77, 4400 AB Yerseke, the Netherlands
[c] HZ University of Applied Sciences, P.O. Box 364, 4380 AJ Vlissingen, the Netherlands

ARTICLE INFO

Keywords:
Predator-prey
Indirect interactions
Population dynamics
Benthic ecology
Mytilus edulis
Asterias rubens

ABSTRACT

Many organisms rely on chemical signals and cues to determine habitat suitability and safety. Chemical signals can mediate many interactions, including those between predators and their prey. Altering prey behaviour, these non-consumptive effects (NCEs) can influence population and community dynamics. Understanding how NCEs influence early life history stages, such as 'decisions' of benthic species with planktonic larvae about where to settle, can provide useful information on the ecological functioning of these systems as well as the management for commercial usage, although most studies have so far focused on intertidal systems which are already subject to a set of stressful conditions. With a shallow subtidal field experiment we investigated NCEs of the common starfish *Asterias rubens* on one of its main preys, the blue mussels *Mytilus edulis*. We tested the hypotheses that (1) the presence of starfish reduces mussels settlement and that (2) the mussels that settle will invest more energy towards induced defences than to growth, and will thus remain smaller than mussels settling in an area without starfish. Two independent trials revealed a significant reduction of mussel spat on the collectors in the presence of starfish after a two-week deployment period. There was however no effect of starfish on the size distribution of the mussel spat. The delayed observation of effects of starfish, absent after the first week but evident afterwards, suggests a time dependency of NCE's on spat settlement. Harnessing this ecologically important information has the potential to increase yield of mussel seeds available for fisheries by either removing starfish from the ground-based settling areas at the onset and for the duration of spatfall or by using floating substrates that are away from the bottom-bound starfish. Moreover, these results also underlines the potential of using predator cues in the application for sustainable natural antifouling compounds in situations with low recruitment pressures.

1. Introduction

Predator-prey dynamics are an essential component of all ecosystems. While 'typical' predator effects relate to direct mortality of prey individuals, indirect effects also exist and are known as non-consumptive effects (NCEs). Such NCEs can alter population and community dynamics via changes in behaviour and trait adaptation (Lima and Dill, 1990; Preisser and Bolnick, 2008). Many organisms rely on cues from the surrounding environment to assess its suitability and safety (Brönmark and Hansson, 2000; Kittredge et al., 1974; Pawlik, 1992; Rittschof et al., 1998). Similarly, they leave cues in such environment that other species will detect. As such, a prey may be able to sense the presence and vicinity of its predator (Jacobsen and Stabell, 2014). Chemical signals that invoke a beneficial change (e.g. predator avoidance) in the receiver are known as kairomones (van Holthoon, 2004). Avoidance responses include moving away to minimize the chance of being reached by predators, reducing movement to avoid detection (Johnston and Molis, 2012; Keppel and Scrosati, 2004) or exhibiting phenotypical plasticity for defensive purposes (Reimer and Tedengren, 1996).

Benthic preys, such as mussels, have developed some predator-specific responses when exposed to these cues, exhibiting phenotypic plasticity when exposed to their common predators, such as crabs and starfish (Aaren, 2007; Caro et al., 2008; Reimer and Harms-Ringdahl, 2001). Not only do mussels exhibit a larger rate of shell closure in the vicinity of starfish, prolonged exposure to this predator has also been observed to induce a reduction in shell circumference as well as increases in both the shell thickness and size of the adductor muscle (Reimer and Tedengren, 1996). The energetic demands of developing these defences may take energy away from growth. The consequences

* Corresponding author.
E-mail address: camilla.bertolini@nioz.nl (C. Bertolini).

https://doi.org/10.1016/j.jembe.2019.03.001
Received 5 October 2018; Received in revised form 5 March 2019; Accepted 5 March 2019
Available online 08 March 2019

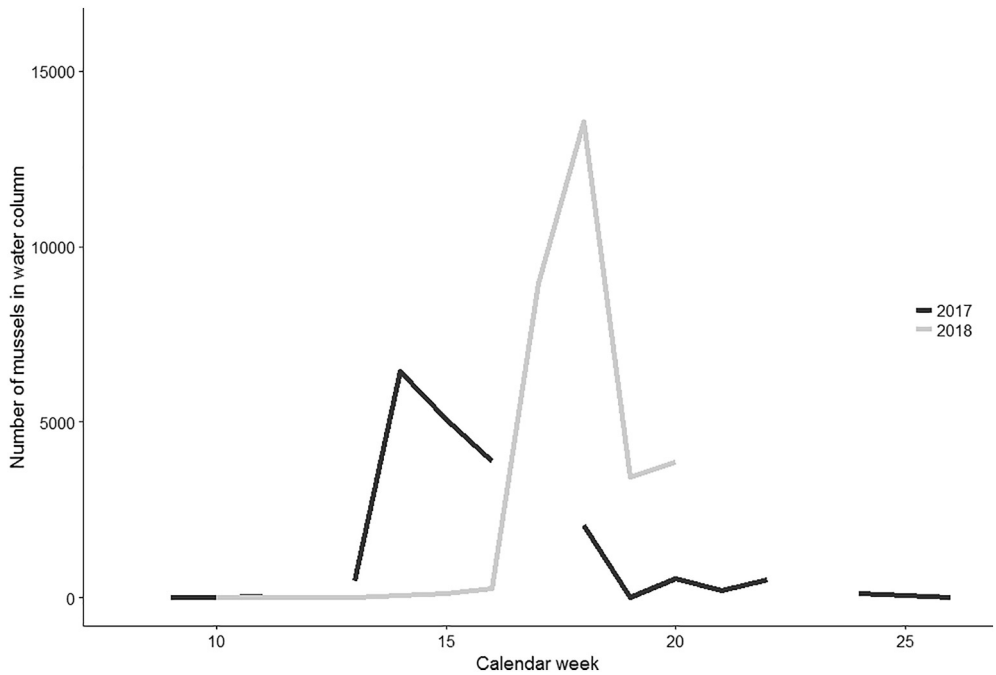

Fig. 1. Number of mussel larvae in the water column during the 2017 (black line) and 2018 (grey line) seasons collected by Wageningen Marine Research as part of regular monitoring for the closest location to our experimental set up (Vondelingen Noord, N 51 36.3140, E 03 54.9933).

of behavioural responses for benthic species demography has however received less attention (Creel et al., 2007; Ellrich et al., 2016). Hence, we focus on how NCEs may affect the establishment phase.

The effects on early life history stages can be particularly interesting, as benthic invertebrates prey are not only the most vulnerable to mortality and predation (Barbeau et al., 1996; Gosselin and Qian, 1997), but they also still show the highest level of phenotypic plasticity allowing them to adjust to the local conditions (Miner et al., 2005). As such, effects during these stages can carry on consequences into adulthood (Ellrich et al., 2016; Nakaoka, 2014; Sherker et al., 2017). Larvae and juvenile stages are typically much more mobile than their adult counterparts (Bayne, 1964; Cáceres-Martínez et al., 1994). Thus their 'decision' on where to settle is one of the critical processes determining the long-term persistence and structure of sessile benthic communities (Dean and Hurd, 1980; Menge et al., 2010; Morse, 1991). The timing of settlement may also be important, as planktotrophic larvae often have a limited window of settlement(Noda et al., 1998). Thus NCEs might have different effects as season progresses, making timing an important aspect to include in NCE-studies. So far however, NCEs effects on settlement have been mostly studied under laboratory conditions, which do not necessarily represent the settlement behaviour under field conditions (Weissburg et al., 2014). Moreover, the few available field studies are mostly focussed on rocky shore systems (e.g. dogwhelk and mussels or dogwhelk and barnacles, Ellrich et al., 2016; Petraitis, 1990; Sherker et al., 2017), while for many sessile organisms the soft-sediment forms a dominant habitat. We hence study the effect of NCEs on settlement on soft-substrates, using Mytilid mussels as an ecologically and economically important model system.

Mytilid mussels constitute a suitable species to test the effects of NCEs on settlement, as it was recently shown how Mytilid species, like *Mytilus edulis* and *Mytilus trossulus*, can respond to cues from dogwhelks by reducing their settlement rates in proximity of these predators (Ehlers et al., 2017). As mussels are a ubiquitous feature of benthic coastal communities worldwide, from intertidal to subtidal and rocky to soft-sediment systems (Bayne and Brian, 2009), such behaviour has the potential to cause major shifts in population dynamics. That is, a reduced settlement will reduce the potential to form mussel-reefs and in turn will have cascading effects on both community and overall ecosystem functioning (Fariñas-Franco and Roberts, 2018; O'Connor et al., 2013). *M. edulis* is also a commercially important species which is farmed extensively (Dolmer et al., 2012; Knights, 2012; Smaal, 2002). Because mussel farmers commonly rely on natural mussel settlement for their culture plots (Boromthanarat and Deslous-Paoli, 1988; Cubillo et al., 2012; Fuentes et al., 1998), a reduced ability for spat to settle, or quality of early settler (Jacobs et al., 2014) may also have major economic consequences. On the other hand, mussels can also be a nuisance by causing macro-fouling on ship hulls, offshore platforms, cooling water systems and mussel culture themselves (South et al., 2017). As prevention and removal of fouling mussels are expensive, time consuming, and often highly polluting (Davis et al., 2017; Rajagopal et al., 2003), thorough ecological understanding of how NCEs may be used to prevent spat settlement at specific locations would be highly beneficial.

In this study, we aim to gain a better insight in how predator-prey interactions may affect the settlement of larvae of the prey, using *Mytilus edulis* and the starfish *Asterias rubens* as model system. To study realistic settlement behaviour, we studied the effect of *Asterias rubens* on the settlement of *Mytilus edulis* in a field experiment. We specifically tested the hypotheses that (1) the presence of starfish reduces mussels settlement and that (2) the mussels that settle in the presence of starfish will invest more energy towards induced defences (c.f. Robinson et al., 2014), and will thus be smaller than mussels of similar age that settled in the absence of starfish.

2. Methods

2.1. Experimental design

A field experiment was conducted between April and May 2018 in shallow waters in the Eastern Scheldt, Netherlands to test starfish cue effects on mussel recruitment. Although onset of mussel recruitment exhibits high yearly variation (Pulfrich, 1996), this is the time of year in which mussels larvae settlement occurs in this region (data from settlement of 2017 and 2018 seasons in the vicinity of the experiment Fig. 1; commercial spat collectors deployed in April, Jacobs et al., 2014).

The experimental unit (Fig. 2) consisted of a cage made of plastic

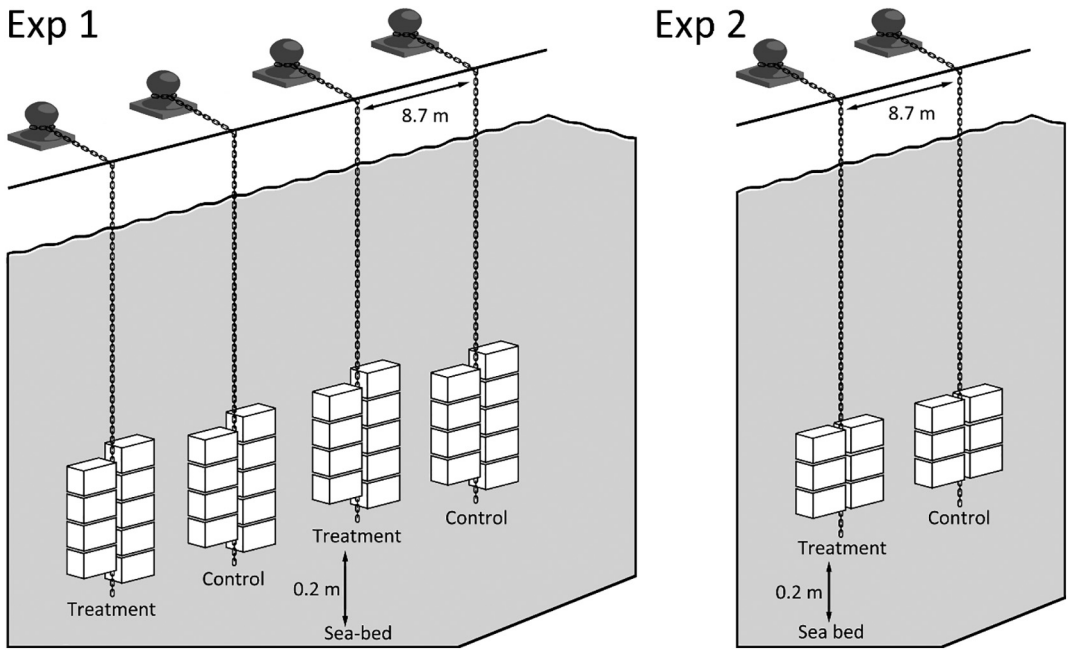

Fig. 2. Schematic diagram of our experimental units deployment for experiment 1 and experiment 2.

mesh (mesh opening = 30 cm, W x L x H = 40 × 20 × 15 cm). Each cage had a central compartment (⌀ = 9 cm) where the spat collector was placed. This was separated using the same mesh material from the main cage. In the main cage a starfish was either present (experimental treatment) or absent (control). Starfish were collected from mussel culture plot in the Oosterschelde (Calderwood et al., 2016), and they were fed mussels ad libitum before placing them in the cages, where they were not fed. Each cage also contained a single stone to stabilize the cage in the water and to provide substratum for the starfish. To ensure similar levels of cue and to prevent the starfish from escaping, the starfish were selected to have a minimum arm length of 5 cm; they were checked daily and replaced if missing. To ensure good water inflow and therefore larval supply, the cages were cleaned on a daily basis from any drifting seaweed and adult crabs that were attached to drifting objects or climbed and were found on the outside of the cages From these visual observation we detected no differences between treatment or control groups with regards to crab presence or fouling. Benson nylon mesh scouring pad (HMK shop, Nijmegen) were used as spat collectors, as they were found to be efficient to quantify larval settlement (Howieson, 2006).

2.1.1. Experiment 1

On April 17th (Week 16, 2018), four sets of units were deployed (Fig. 2). Each set consisted of nine adjacent cages (Fig. 3), attached to a stainless-steel chain attached to the pier of NIOZ Yerseke (51°29′17.1″N 4°03′29.6″E). Four units were made in total, of which two served as experimental treatment, and two as control. The main current is from tidal flow and runs parallel to the pier, however slower perpendicular flow is also present, and all units were equally exposed, ensuring equal supply of larvae. The experimental treatment units and the controls were spaced to minimize as much as possible cue influence (Fig. 2). The total number of cages at initial deployment was 36 (18 controls divided over 2 cables and 18 treatments divided over 2 cables). All units hang constantly submersed, with a minimum distance of 20 cm above the seabed to avoid sand from clogging the spat collectors and starfish to climb on the cage. The only exceptions occurred during exceptionally low tides, where cages were emerged for a limited time. Starting April 24th (week17, 2018) three cages from the control group and three cages from the treatment group were taken out weekly at random (i.e. from both chains at each time point so chains were random effects rather than blocks). This weekly sampling was continued over a six weeks period, until all cages were collected.

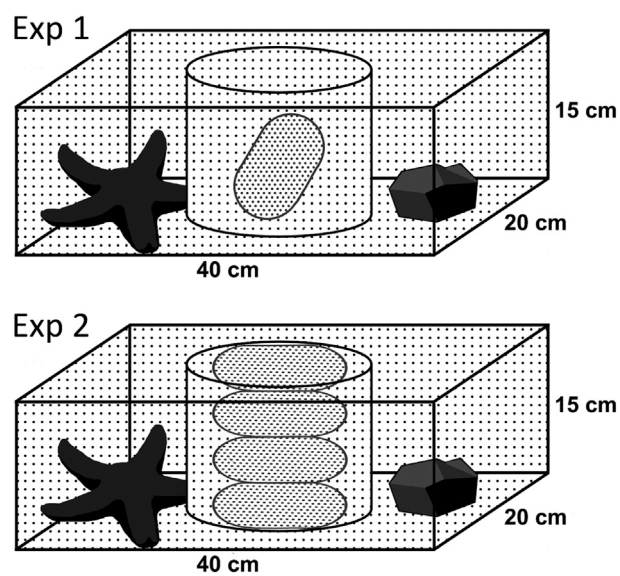

Fig. 3. Schematic diagram of cages for experiment 1 and experiment 2 (here showing: 'treatment').

2.1.2. Experiment 2

To understand whether initial deployment of the collectors in a period with greater larval abundance would change the results, we repeated the experiment in May 4th (Week 18, 2018). On this date a second set of units was deployed at the same location. This time two units, one experimental and one control, were deployed; each unit consisted of 6 adjacent cages (Fig. 2). For this separate trial we added 4 collectors in the center compartment of each cage (Fig. 3). This adjusted design was used for logistic reasons, in order to minimize the material necessary and the amount of starfish needed. Starting May 9th (week19) one collector from each of the 12 cages was taken out weekly. This weekly sampling was continued for four weeks, until all cages were empty.

2.2. Quantifying recruitment

Spat collectors were taken out of the cages, cut open and rinsed over a 45 μm sieve. The sieved residue was subsequently stored in 70% ethanol. Afterwards, the residue was transferred to empty petri dishes and the mussel larvae were counted using a microscope (Leica MS5, equipped with lens LEICA 104450, Leica Biosystems, Nussloch, Germany). The size (length and width) of the mussel larvae was recorded using a Zeiss 4750529901 equipped with a ruler guide in the right lens (Carl Zeiss AG, Oberkochen, Germany). Secondary species which recruited or used the collectors as refuge habitat, were also recorded, as counts by major group (amphipods, polychates, small crustaceans, bivalves, other unidentified) as control to show that there was no treatment effect independent of NCEs.

2.3. Statistical analyses

All analyses were conducted using R (R Development Core, 2018). The effects of treatment (two levels: 'starfish', 'control'), time (experiment 1: six time points, experiment 2: four time points) and their interaction were tested with generalised linear mixed models (package 'lme4'), which included 'set' as a random factor for experiment 1 and 'cage' as a random factor for experiment 2. These random effects were selected because cages were fully removed from the sets in experiment 1, while in experiment 2 we removed collectors from cages (Fig. 3). A Poisson family with a log link was used for the numbers of mussel spat, and a negative binomial distribution was used for the number of other organisms, as these models showed to be the best fit for the data when the residuals were inspected for normality and homogeneity (Zuur et al., 2009). From model comparison, assessing overall model significance (*anova* comparisons) we found that for both experiment 1 and experiment 2 the random factor had no significant effects thus the simpler model (a glm) was chosen. Pseudo coefficient of determination (R^2) for generalised linear mixed models were calculated using the package MuMIn (Nakagawa and Schielzeth, 2013). Effect sizes for the significant terms were calculated comparing pseudo coefficients for the full model and reduced models (not containing the term).

In order to assess the effects on size distribution of recruiting mussels, recruits were divided in size classes of 1 mm, and the number of recruits falling in each size-class bin was counted. For both experiments, a zero-inflated generalised linear model (package 'pscl', zeroinfl) with a Poisson family and a log link was run on the counts of individuals present in each size bin, including size bin as a fixed factor in analysis and adding it as an interaction term (three way interaction: treatment*time*size-class).

The residuals of all tests were visually checked for normality and heterogeneity (Zuur et al., 2009). An analysis of variancewith a Chi-squared test using the *Anova* function in the package *car* was then used to generate overall *p*-values; a type III was conducted as a first choice to ensure the focus of the test on the interaction term, but where interactions were not significant, a type II sums of squares was used to allow the appropriate detection of single term effect (Langsrud, 2003). If terms were significant, pairwise comparisons between levels were carried out using least means squares estimates (*lsmeans* package) based on Tukey comparisons.

3. Results

In agreement to our 1st hypothesis, in both experiments the number of spat was significantly greater in the control treatment compared to when starfish were present. This difference only became evident after at least two weeks of deployment in both cases (treatment*week, experiment 1: $X^2_{(5)} = 43.8$, $p < .001$, model R^2: 0.78; effect size = 1; experiment 2: $X^2_{(3)} = 10.9$, $p < .05$, model R^2: 0.97, effect size = 0.66 Fig. 4), with the reduction in settlement from the presence of starfish having alone small effect sizes (experiment 1: effect size = 0.02; experiment 2: effect size = 0.02), and. The interaction showed that the effect of starfish presence was only visible from week three in experiment 1 (treatment $X^2_{(1)} = 12$, $p < .001$, Tukey: $p < .01$) and from week two in experiment 2 (treatment $X^2_{(1)} = 5$, $p < .05$, Tukey: $p < .001$). In both experiments, the number of spat increased with time (experiment 1: $X^2_{(5)} = 28.4$, $p < .0001$, effect size = 0.41; experiment 2: $X^2_{(3)} = 385.4$, $p < .0001$, effect size = 12). The size distribution in the first experiment changed across time between treatments (size class*treatment*week $X^2_{(50)} = 146.4$ $p < .001$, Fig. 5a), but was not affected by treatment alone (size class * treatment $p > .05$) and was only influenced by time (size class * time $X^2_{(50)} = 352.3$, $p < .001$). In the second experiment, only changes in distribution in time were observed (size class * time $X^2_{(12)} = 152.6$ $p < .001$, Fig. 5b).

In both experiments, the total number of individuals of other species (mainly small crustaceans and polychaetes, Table 1), did not depend on treatment. There was however, an effect of time for both experiments ($X^2_{(5)} = 24.2$, $p < .001$, model R^2:0.43, $X^2_{(3)} = 59.4$, $p < .005$, model R^2: 0.22; Fig. 6), with an increase in the second week of deployment compared to the first (Tukey: $p < .001$) and a decrease the following week (Tukey: $p < .001$) after which the number of organisms stabilised (Tukey: $p > .05$).

4. Discussion

Non consumptive effects of predators can lead to changes in population dynamics that are often under-estimated in classical predator-prey studies which typically included only consumptive aspects (Peckarsky et al., 2008). With this field study we provide evidence for the negative effects of chemical cues (NCE's) from the presence of predators on the settlement of a sessile benthic species. These negative effects were observed only in regards to the recruitment of *Mytilus edulis*, one of the main prey of *Asterias rubens*, while the recruitment of other non-prey species was not affected. Interestingly, the reduction in recruitment due to predator presence was not an immediate response, but instead built up over time, indicating potential for transiency in predator response and the need for careful design of these experiments (Barrios-O'Neill et al., 2017; Peers et al., 2018).

Predator-prey studies involving these indirect interactions have often been limited to mesocosm studies, and the few field studies have focused on just one or two time points, designs which inherently underestimate the complexity of these interactions (Witman et al., 2015). What we found confirms the idea that these indirect interactions are complex. Our experiment overcame some of these issues measuring recruitment directly in the field and at multiple points during the recruitment season. The effects of exposure to predation cue became more evident over time, approximately after twenty days from the date of original deployment. Effects of starfish presence was present, albeit small, but the magnifying effects of time can signify significant shifts in population dynamics as time goes on, and may have influences at community level (Osman and Whitlach, 1995; Osman and Whitlatch, 1998; Rilov and Schiel, 2011). It could be expected that the increase in density of spatfall should weaken NCEs (Benkwitt, 2017; Ellrich et al., 2015; Vermeij, 2008), similarly to what has been reported for other behavioural metrics, such as feeding rates (Kimbro et al., 2017). In our study the resulting effects of NCEs increased with time in both trials. Firstly, mussels are known to follow a bi-phasic recruitment, where small mussels are still able to leave an area deemed unsuitable (Bayne, 1964), which may explain how the differences became more evident as time moved forward. Larvae are also known to be attracted by the cues of conspecifics (Dolmer and Stenalt, 2010). Settlement rates of many benthic species are found to be positively influenced by previous successful settlement (Noda et al., 1998) thus greater densities of mussel spats recruiting in the control pads could have contributed to the increased settlement in the controls.

The size of the recruits was used as a proxy to identify eventual trade-offs between growth and induced defences at these early life

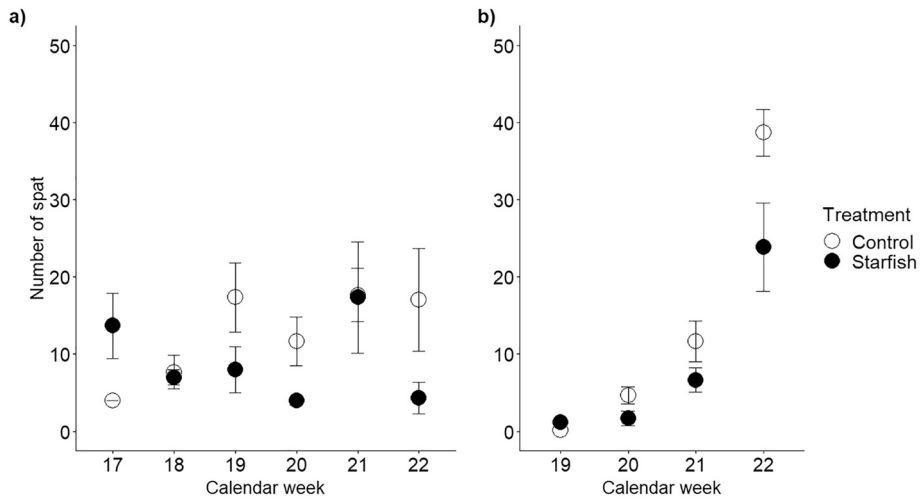

Fig. 4. Mean (± SE) number of spat for (a) experiment 1, (b) experiment 2 in absence (control, empty circles) and presence of starfish (filled circles) on the collectors at consequent sampling points.

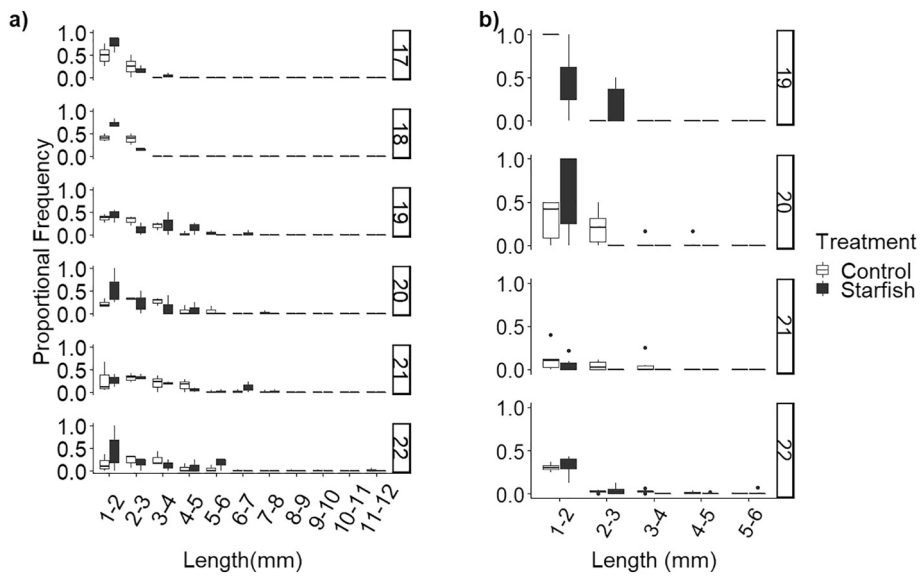

Fig. 5. Proportional size frequency for (a) experiment 1, (b) experiment 2 in subsequent sampling time points for cages containing starfish (empty boxes) and controls (filled boxes).

Table 1
Mean abundance (± SE) of other identified organisms taxa (Amphipods, Polychaetes) and unidentified in Experiment 1 and Experiment 2, by week of sampling in absence and presence of starfish.

Experiment 1 (In water week 16)	Starfish absent			Starfish present		
	Amphipods	Polychaetes	Other	Amphipods	Polychaetes	Other
Week 17	36.6 ± 15	11.3 ± 1.7	3 ± 0	20.6 ± 3.2	20.5 ± 8.4	2 ± 0
Week 18	140.3 ± 86.3	27.3 ± 18.8	2.6 ± 0.6	134 ± 39.3	8.3 ± 2.4	3.6 ± 0.8
Week 19	50.3 ± 5.3	14.7 ± 6.2	3.6 ± 0.3	24.7 ± 4.3	20.3 ± 1.2	1.5 ± 0.4
Week 20	52.6 ± 8.1	18.3 ± 2.4	6.6 ± 3.2	48 ± 34.3	20 ± 3.5	6.6 ± 2.6
Week 21	72.5 ± 4.5	38 ± 5.7	0	61 ± 34.2	45.7 ± 18.7	3 ± 0
Week 22	112.3 ± 9.1	24 ± 5.5	0	77.3 ± 9.1	39.6 ± 7.5	0

Experiment 2 (In water week 18)	Starfish absent			Starfish present		
	Amphipods	Polychaetes	Other	Amphipods	Polychaetes	Other
Week 19	100.2 ± 15.7	4 ± 0.9	0	167.7 ± 14.3	10 ± 3.2	0
Week 20	331.5 ± 44.6	14.2 ± 3	0	370 ± 71.6	15.5 ± 2.9	0
Week 21	76.5 ± 12.7	23.8 ± 2.9	18.3 ± 3.4	37 ± 9	25.1 ± 3.2	4 ± 1.5
Week 22	41.5 ± 7.9	6.5 ± 2.9	73.8 ± 11	47.6 ± 7.6	45.5 ± 8.4	8.9 ± 2.02

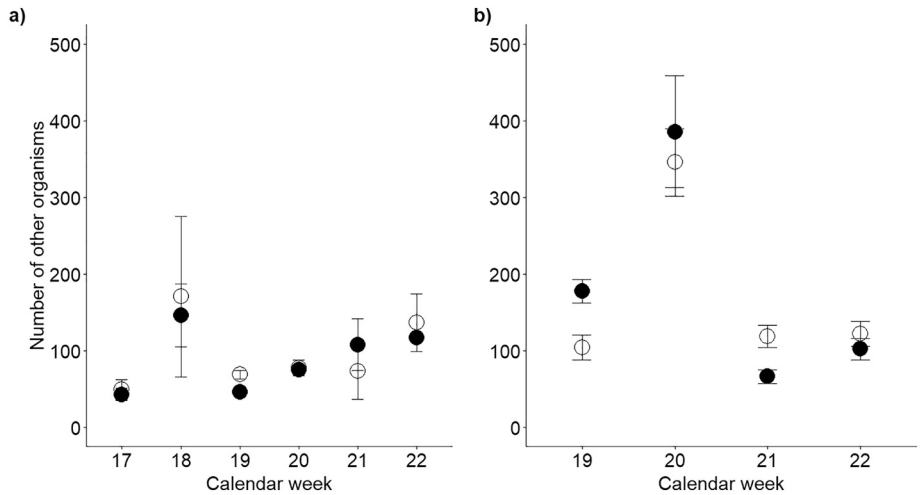

Fig. 6. Mean (± SE) total number of other organisms for (a) experiment 1, (b) experiment 2 in absence (control, empty circles) and presence of starfish (filled circles) on the collectors at consequent sampling.

stages. Effects of starfish presence or interactions with time was not present when we looked at the size of the recruits, suggesting that the changes observed in the number of spat with predation risk were not due to one cohort of larvae responding, but an overall reduction. Mussel spat size was similar to that observed in other recruitment studies (Ceccherelli and Rossi, 1984; Pulfrich, 1996) and generally increased overtime, particularly on our first experiment, at a rate similar to other studies, suggesting that growth did occur in our experimental set up and was not influenced by presence of starfish, thus contradicting our initial hypothesis of changes in resource allocation from growth to morphological adaptations. Because mussels might reach a size dependent refuge from predators (Hummel et al., 2011), growing fast from settlement may be in itself considered "defence" which may be innate rather than induced (Aaren, 2007; Johnson and Smee, 2012), and may therefore explain the lack of expected differences in growth rates at these very early stages Settlement also occurred in a period where food supply is high thus perhaps energetic demands of both shell growth and defences can be met. Moreover, we did not obtain direct measurements of the investment in other tissue growth (e.g. adductor muscles). Further studies should examine the development of such defences in specific.

The fall of recruit numbers when a starfish was present, yet unable to have direct consumptive effect due to the caging, showed that mussel larvae are able to detect risk cues emanated by starfish. Other organisms in the same setup, mostly small crustaceans and polychaetes, did not exhibit the same response to the presence starfish. They only followed a temporal colonisation pattern (Boothroyd and Dickie, 1989; Kerckhof et al., 2010), which is typical when new substrates become available. This was true in both experiments with different times of initial collector deployment. This result makes it possible to exclude major other drivers of the differences here found between the two treatments and suggests that space limitation, or consumption of larvae from the presence of other species could not have been the cause of the here observed differences in mussels recruitment between our two treatments.

Our experiment, with collectors adjacent to the seabed, should be representative of what larvae may experience in the field. While horizontal swimming velocities of larvae tend to be limited (in the region of 10^{-4} m/s, Chia et al., 1984) when compared with flow velocities in the water column (up to 1 m/s, Brand et al., 2016), they have abilities to swim vertically (Knights et al., 2006), exploiting the benthic boundary layer. This has been suggested as the way in which larvae can avoid areas with predator cues (Morello and Yund, 2016). Thus even if on larger scales supply of larvae may be more important factor, on a local scale predator avoidance may still cause local shifts and dynamics (Kingsford et al., 2002).

The suspended collectors employed in this experiment could be considered representative of spat collectors employed by the mussel farming industry. Recruitment is an important aspect of bivalve aquaculture, representing the necessary first step for all types of culture (Jacobs et al., 2014; Kamermans et al., 2002). Predation is, however, found to have a major influence on post settlement survival (Filgueira et al., 2007) and, according to results of this study, might also influence successful recruitment. Removing predatory starfish from the area on a regular basis during spring season, when mussels starts to recruit should thus result in increased yield of mussel spat in collection areas. This consideration can be particularly important in areas were recruitment pressure is relatively low and larvae are able to select their preferred settlement susbtratum. The opposite effect, i.e. reducing settlement by making a substrate seemingly unsuitable for settlement, can be harnessed in industries where fouling is an issue. In both scenarios, we suggest further research to focus on identifying the chemicals responsible for these cues.Knowledge on the mechanisms behind cues is still limited (de Vooys, 2003). Several studies have suggested that saponins, a natural secondary metabolite present in Echinoderms, particularly Asteroidae (Burnell and ApSimon, 1983; Demeyer et al., 2015; Mackie et al., 1977) are the responsible compounds triggering NCEs. Thus the possibilities to use starfish cues, potentially saponins, to create more natural antifouling materials should be further evaluated (Hellio et al., 2009). As time, both in terms of seasons and in terms of experimental duration, is an essential factor when studying recruitment (Underwood and Fairweather, 1989), we recommend for future studies to consider the development of NCEs over multiple time points, to understand whether these cues can accumulate overtime becoming stronger or whether an 'adaptation' to the cue can occur, perhaps due to a dilution effects given by density of conspecifics. Ecology and biochemistry should be working in tandem to identify the compounds responsible for the cues and their persistence or transiency in environment. This is an essential factor to consider to allow broader inter-study comparisons (Anderson and Underwood, 1994) and to carefully reconsider previous studies concerning recruitment at a single point in time (e.g. Ehlers et al., 2017). The results of this study suggest that models of population demography should take into account this indirect aspect of predator-prey interactions driven simply by the presence of predators, and carefully model its effects in time. This will be useful to predict community shifts arising from changes in recruitment which can alter space-occupancy and species dominance, as shown by changes in recruitment of primary space occupying barnacles at

locations where recruitment follows stochastic events (Svensson et al., 2004) and its implication for trophic cascades and ultimately ecological tipping points (Matassa et al., 2018; Pruitt et al., 2018).

Acknowledgements

We are thankful to Chris Tiesinga and Flemmings Versloot for their help during the field experiment and to Dylan de Jong for providing useful comments and improvements on the manuscript and figures. This project has received funding from the European Union, through the European Maritime and Fisheries Fund (EMFF) and from the Producers' Organization of the Dutch mussel culture (POM). The work is also partly financed by the research program SIA-L.INT, a Netherlands Organization for Scientific Research (NWO-SIA).

References

Aaren, S., 2007. Specificity of induced defenses in Mytilus edulis and asymmetrical predator deterrence. Mar. Ecol. Prog. Ser. 334, 145–153. https://doi.org/10.3354/meps334145.

Anderson, M.J., Underwood, A.J., 1994. Effects of substratum on the recruitment and development of an intertidal estuarine fouling assemblage. J. Exp. Mar. Bio. Ecol. 184, 217–236. https://doi.org/10.1016/0022-0981(94)90006-X.

Barbeau, M.A., Hatcher, B.G., Scheibling, R.E., Hennigar, A.W., Taylor, L.H., Risk, A.C., 1996. Dynamics of juvenile sea scallop (Placopecten magellanicus) and their predators in bottom seeding trials in Lunenburg Bay. Nova Scotia. Can. J. Fish. Aquat. Sci 53, 2494–2512.

Barrios-O'Neill, D., Bertolini, C., Collins, P.C., 2017. Trophic cascades and the transient keystone concept. Biol. Conserv. 212, 191–195. https://doi.org/10.1016/j.biocon.2017.06.011.

Bayne, B.L., 1964. Primary and secondary settlement in Mollusca, Mytilus Edulis L. J. Anim. Ecol. 33, 513–523.

Bayne, B.L., Brian, L., 2009. Marine Mussels : Their Ecology and Physiology. Cambridge University Press.

Benkwitt, C.E., 2017. Predator effects on reef fish settlement depend on predator origin and recruit density. Ecology 98, 896–902. https://doi.org/10.1002/ecy.1732.

Boothroyd, I.K.G., Dickie, B.N., 1989. Macroinvertebrate colonisation of perspex artificial substrates for use in biomonitoring studies. New Zeal. J. Mar. Freshw. Res. 23, 467–478. https://doi.org/10.1080/00288330.1989.9516383.

Boromthanarat, S., Deslous-Paoli, J.M., 1988. Production of Mytilus edulis L. reared on bouchots in the bay of Marennes-Oleron: comparison between two methods of culture. Aquaculture 72, 255–263. https://doi.org/10.1016/0044-8486(88)90214-1.

Brand, N., Kothuis, B.L.M., van Prooijen, B.C., 2016. The Eastern Scheldt Survey A concise overview of the estuary pre-and post barrier -Part 2: SURVEY. Urban Integr. https://library.wur.nl/WebQuery/hydrotheek/2222061 (42 pages).

Brönmark, C., Hansson, L., 2000. Chemical communication in aquatic systems: an introduction. Oikos 1–7. https://doi.org/10.1034/j.1600-0706.2000.880112.x.

Burnell, D., ApSimon, J., 1983. Echinoderms saponins. In: Marine Natural Products: Chemical and Biological Perspectives, pp. 287–389.

Cáceres-Martínez, J., Robledo, J.A.F., Figueras, A., 1994. Settlement and post-larvae behaviour of Mytilus galloprovincialis: field and laboratory experiments. Mar. Ecol. Prog. Ser. 112, 107–117. https://doi.org/10.2307/24847642.

Calderwood, J., O'Connor, N.E., Roberts, D., 2016. Efficiency of starfish mopping in reducing predation on cultivated benthic mussels (Mytilus edulis Linnaeus). Aquaculture 452, 88–96. https://doi.org/10.1016/j.aquaculture.2015.10.024.

Caro, A.U., Escobar, J., Bozinovic, F., Navarrete, S.A., Castilla, J.C., 2008. Phenotypic variability in byssus thread production of intertidal mussels induced by predators with different feeding strategies. Mar. Ecol. Prog. Ser. 372, 127–134. https://doi.org/10.3354/meps07701.

Ceccherelli, V.U., Rossi, R., 1984. Settlement, growth and production of the mussel Mytilus galloprovincialis. Mar. Ecol. Prog. Ser. 16, 173–184. https://doi.org/10.2307/24816080.

Chia, F.-S., Buckland-Nicks, J., Young, C.M., 1984. Locomotion of marine invertebrate larvae: a review. Can. J. Zool. 62, 1205–1222. https://doi.org/10.1139/z84-176.

Creel, S., Christianson, D., Liley, S., Winnie, J.A., 2007. Predation risk affects reproductive physiology and demography of elk. Science 315, 960. https://doi.org/10.1126/science.1135918.

Cubillo, A.M., Peteiro, L.G., Fernández-Reiriz, M.J., Labarta, U., 2012. Influence of stocking density on growth of mussels (Mytilus galloprovincialis) in suspended culture. Aquaculture 342–343, 103–111. https://doi.org/10.1016/j.aquaculture.2012.02.017.

Davis, E.A., Wong, W.H., Harman, W.N., 2017. Toxicity of potassium chloride compared to sodium chloride for zebra mussel decontamination. J. Aquat. Anim. Health. https://doi.org/10.1080/08997659.2017.1388866. 08997659.2017.1388866.

de Vooys, C.G.N., 2003. Effect of a tripeptide on the aggregational behaviour of the blue mussel Mytilus edulis. Mar. Biol. 142, 1119–1123.

Dean, T.A., Hurd, L.E., 1980. Development in an estuarine fouling community: the influence of early colonists on later arrivals. Oecologia 46, 295–301. https://doi.org/10.1007/BF00346255.

Demeyer, M., Wisztorski, M., Decroo, C., De Winter, J., Caulier, G., Hennebert, E., Eeckhaut, I., Fournier, I., Flammang, P., Gerbaux, P., 2015. Inter- and intra-organ spatial distributions of sea star saponins by MALDI imaging. Anal. Bioanal. Chem. 407, 8813–8824. https://doi.org/10.1007/s00216-015-9044-0.

Dolmer, P., Stenalt, E., 2010. The impact of the adult blue mussel (Mytilus edulis) population on settling of conspecific larvae. Aquac. Int. 18, 3–17. https://doi.org/10.1007/s10499-009-9266-2.

Dolmer, P., Christensen, H., Hansen, B., Vismann, B., 2012. Area-intensive bottom culture of blue mussels Mytilus edulis in a micro-tidal estuary. Aquac. Environ. Interact. 3, 81–91. https://doi.org/10.3354/aei00053.

Ehlers, S., Scrosati, R.A., Ellrich, J.A., 2017. Nonconsumptive predator effects on prey demography : dogwhelk cues decrease benthic mussel recruitment. J. Zool. 305, 240–245. https://doi.org/10.1101/172692.

Ellrich, J.A., Scrosati, R.A., Molis, M., 2015. Predator non-consumptive effects on prey recruitment weaken with recruit density. Ecology. https://doi.org/10.1890/14-1856.1.

Ellrich, J.A., Scrosati, R.A., Bertolini, C., Molis, M., 2016. A predator has nonconsumptive effects on different life-history stages of a prey. Mar. Biol. 163, 1–8. https://doi.org/10.1007/s00227-015-2778-6.

Fariñas-Franco, J.M., Roberts, D., 2018. The relevance of reproduction and recruitment to the conservation and restoration of keystone marine invertebrates: A case study of sublittoral *Modiolus modiolus* reefs impacted by demersal fishing. Aquat. Conserv. Mar. Freshw. Ecosyst. 28 (3), 672–689.

Filgueira, R., Peteiro, L.G., Labarta, U., Fernández-Reiriz, M.J., 2007. Assessment of spat collector ropes in Galician mussel farming. Aquac. Eng. https://doi.org/10.1016/j.aquaeng.2007.06.001.

Fuentes, J., Molares, J., Villalba, A., 1998. Growth, mortality and parasitization of mussels cultivated in the Ría de Arousa (NW Spain) from two sources of seed: intertidal rocky shore vs. collector ropes. Aquaculture 162, 231–240. https://doi.org/10.1016/S0044-8486(98)00214-2.

Gosselin, L.A., Qian, P.-Y., 1997. Juvenile mortlaity in benthic marine invertebrates. Mar. Ecol. Prog. Ser. 146, 265–282. Doi https://doi.org/10.3354/Meps146265.

Hellio, C., Maréchal, J.-P., Da Gama, B.A.P., Pereira, R.C., Clare, A.S., 2009. Natural marine products with antifouling activities. In: Advances in Marine Antifouling Coatings and Technologies. Elsevier, pp. 572–622. https://doi.org/10.1533/9781845696313.3.572.

Howieson, J., 2006. Do settling mussels (Mytilus spp.) prefer macroalgae over artificial substrates? A test of collector preference along the Oregon coast. Oregon State University.

Hummel, C., Honkoop, P., van der Meer, J., 2011. Small is profitable: no support for the optimal foraging theory in sea stars Asterias rubens foraging on the blue edible mussel Mytilus edulis. Estuar. Coast. Shelf Sci. 94, 89–92. https://doi.org/10.1016/j.ecss.2011.05.028.

Jacobs, P., Beauchemin, C., Riegman, R., 2014. Growth of juvenile blue mussels (Mytilus edulis) on suspended collectors in the Dutch Wadden Sea. J. Sea Res. 85, 365–371. https://doi.org/10.1016/j.seares.2013.07.006.

Jacobsen, H.P., Stabell, O.B., 2014. Antipredator behaviour mediated by chemical cues : the role of in the avoidance and predator alarm signalling conspecific labelling response of a marine gastropod. Oikos 104, 43–50.

Johnson, K.D., Smee, D.L., 2012. Size matters for risk assessment and resource allocation in bivalves. Mar. Ecol. Prog. Ser. 462, 103–110. https://doi.org/10.3354/meps09804.

Johnston, B., Molis, M., Scrosati, R.A., 2012. Predator chemical cues affect prey feeding activity differently in juveniles and adults. Can. J. Zool. 90, 128–132.

Kamermans, P., Brummelhuis, E., Smaal, A., 2002. Use of spat collectors to enhance supply of seed for bottom culture of blue mussels *Mytilus edulis* in the Netherlands. World Aquac. 33, 12–15.

Keppel, E., Scrosati, R., 2004. Chemically mediated avoidance of Hemigrapsus nudus (Crustacea) by Littorina scutulata (Gastropoda): effects of species coexistence and variable cues. Anim. Behav. 68, 915–920.

Kerckhof, F., Rumes, B., Jacques, T., Degraer, S., Norro, A., 2010. Early development of the subtidal marine biofouling on a concrete offshore windmill foundation on the Thornton Bank (southern North Sea): first monitoring results. Int. J. Soc. Underw. Technol. 29, 137–149. https://doi.org/10.3723/ut.29.137.

Kimbro, D.L., Grabowski, J.H., Hughes, A.R., Piehler, M.F., White, J.W., 2017. Nonconsumptive effects of a predator weaken then rebound over time. Ecology 98, 656–667. https://doi.org/10.1002/ecy.1702.

Kingsford, M.J., Leis, J.M., Shanks, A., Lindeman, K.C., Morgan, S.G., Pineda, J., 2002. Sensory environments, larval abilities and local self-recruitment. Bull. Mar. Sci. 70, 309–340.

Kittredge, J., Takahashi, F.T., Lindsey, J., Lasker, R., 1974. Chemical signals in the sea: marine allelochemics and evolution. Fish. Bull. 72, 1–11.

Knights, A.M., 2012. Spatial variation in body size and reproductive condition of subtidal mussels: considerations for sustainable management. Fish. Res. 113, 45–54. https://doi.org/10.1016/j.fishres.2011.09.002.

Knights, A., Crowe, T., Burnell, G., 2006. Mechanisms of larval transport: vertical distribution of bivalve larvae varies with tidal conditions. Mar. Ecol. Prog. Ser. 326, 167–174. https://doi.org/10.3354/meps326167.

Langsrud, Ø., 2003. ANOVA for unbalanced data: use type II instead of type III sums of squares. Stat. Comput. 13, 163–167. https://doi.org/10.1023/A:1023260610025.

Lima, S.L., Dill, L.M., 1990. Behavioral decisions made under the risk of predation: a review and prospectus. Can. J. Zool. 68, 619–640. https://doi.org/10.1139/z90-092.

Mackie, A.M., Singh, H.T., Owen, J.M., 1977. Studies on the distribution, biosynthesis and function of steroidal saponins in echinoderms. Comp. Biochem. Physiol. Part B Comp. Biochem. 56, 9–14. https://doi.org/10.1016/0305-0491(77)90214-0.

Matassa, C.M., Ewanchuk, P.J., Trussell, G.C., 2018. Cascading effects of a top predator on intraspecific competition at intermediate and basal trophic levels. Funct. Ecol.

https://doi.org/10.1111/1365-2435.13131.
Menge, B.a., Foley, M.M., Pamplin, J., Murphy, G., Pennington, C., 2010. Supply-side ecology, barnacle recruitment, and rocky intertidal community dynamics: do settlement surface and limpet disturbance matter? J. Exp. Mar. Bio. Ecol. 392, 160–175. https://doi.org/10.1016/j.jembe.2010.04.032.
Miner, B.G., Sultan, S.E., Morgan, S.G., Padilla, D.K., Relyea, R.A., 2005. Ecological consequences of phenotypic plasticity. Trends Ecol. Evol. 20, 685–692. https://doi.org/10.1016/J.TREE.2005.08.002.
Morello, S.L., Yund, P.O., 2016. Response of Competent Blue Mussel (*Mytilus edulis*) Larvae to Positive and Negative Settlement Cues. https://doi.org/10.1016/j.jembe.2016.03.019.
Morse, A.N.C., 1991. How do planktonic larvae know where to settle? Am. Sci. https://doi.org/10.2307/29774323.
Nakagawa, S., Schielzeth, H., 2013. A general and simple method for obtaining R2 from generalized linear mixed-effects models. Methods Ecol. Evol. https://doi.org/10.1111/j.2041-210x.2012.00261.x.
Nakaoka, M., 2014. Nonlethal effects of predators on prey populations: predator-mediated change in bivalve growth. Ecology 81, 1031–1045.
Noda, T., Fukushima, K., Mori, T., 1998. Daily settlement variability of the barnacle Semibalanus cariosus: importance of physical factors and density-dependent processes. Mar. Ecol. Prog. Ser. 169, 289–293. https://doi.org/10.3354/meps169289.
O'Connor, N.E., Emmerson, M.C., Crowe, T.P., Donohue, I., 2013. Distinguishing between direct and indirect effects of predators in complex ecosystems. J. Anim. Ecol. 82, 438–448. https://doi.org/10.1111/1365-2656.12001.
Osman, R.W., Whitlach, R.B., 1995. Predation on early ontogenetic life stages and its effect on recruitment into a marine epifaunal community. Mar. Ecol. Prog. Ser. 117, 111–126. https://doi.org/10.3354/meps117111.
Osman, R.W., Whitlatch, R.B., 1998. Local Control of Recruitment in an Epifaunal Community and the Consequences to Colonization Processes. pp. 113–123.
Pawlik, J.R., 1992. Chemical ecology of the settlement of benthic marine invertebrates. Oceanogr. Mar. Biol. Annu. Rev. 30, 273–335.
Peers, M.J.L., Majchrzak, Y.N., Neilson, E., Lamb, C.T., Hämäläinen, A., Haines, J.A., Garland, L., Doran-Myers, D., Broadley, K., Boonstra, R., Boutin, S., 2018. Quantifying fear effects on prey demography in nature. Ecology. https://doi.org/10.1002/ecy.2381.
Peckarsky, B.L., Abrams, P.A., Bolnick, D.I., Dill, L.M., Grabowski, J.H., Luttbeg, B., Orrock, J.L., Peacor, S.D., Preisser, E.L., Schmitz, O.J., Trussell, G.C., 2008. Revisiting the classics: considering nonconsumptive effects in textbook examples of predator–prey interactions. Ecology 89 (9), 2416–2425.
Petraitis, P.S., 1990. Direct and indirect effects of predation, herbivory and surface rugosity on mussel recruitment. Oecologia. https://doi.org/10.1007/BF00317568.
Preisser, E.L., Bolnick, D.I., 2008. The many faces of fear: comparing the pathways and impacts of nonconsumptive predator effects on prey populations. PLoS One 3, e2465. https://doi.org/10.1371/journal.pone.0002465.
Pruitt, J.N., Berdahl, A., Riehl, C., Pinter-Wollman, N., Moeller, H.V., Pringle, E.G., Aplin, L.M., Robinson, E.J.H., Grilli, J., Yeh, P., Savage, V.M., Price, M.H., Garland, J., Gilby, I.C., Crofoot, M.C., Doering, G.N., Hobson, E.A., 2018. Social tipping points in animal societies. Proceedings. Biol. Sci. 285, 20181282. https://doi.org/10.1098/rspb.2018.1282.
Pulfrich, A., 1996. Attachment and settlement of post-larval mussels (Mytilus edulis L.) in the Schleswig-Holstein Wadden Sea. J. Sea Res. 36, 239–250. https://doi.org/10.1016/S1385-1101(96)90793-5.
R Development Core, 2018. R: A language and environment for statistical computing.
Rajagopal, S., Van der Velde, G., Van der Gaag, M., Jenner, H.A., 2003. How effective is intermittent chlorination to control adult mussel fouling in cooling water systems? Water Res. 37, 329–338. https://doi.org/10.1016/S0043-1354(02)00270-1.
Reimer, O., Harms-Ringdahl, S., 2001. Predator-inducible changes in blue mussels from the predator-free Baltic Sea. Mar. Biol. 139, 959–965. https://doi.org/10.1007/s002270100606.
Reimer, O., Tedengren, M., 1996. Phenotypical improvement of morphological defences in the mussel Mytilus edulis induced by exposure to the predator Asterias rubens. Oikos 75, 383–390.
Rilov, G., Schiel, D.R., 2011. Community regulation: the relative importance of recruitment and predation intensity of an intertidal community dominant in a seascape context. PLoS One 6, e23958. https://doi.org/10.1371/journal.pone.0023958.
Rittschof, D., Forward, R.B., Cannon, G., Welch, J.M., McClary, M., Holm, E.R., Clare, A.S., Conova, S., McKelvey, L.M., Bryan, P., van Dover, C.L., 1998. Cues and context: larval responses to physical and chemical cues. Biofouling 12, 31–44. https://doi.org/10.1080/08927019809378344.
Robinson, E., Lunt, J., Marshall, C., Smee, D., 2014. Eastern oysters Crassostrea virginica deter crab predators by altering their morphology in response to crab cues. Aquat. Biol. 20, 111–118. https://doi.org/10.3354/ab00549.
Sherker, Z.T., Ellrich, J.A., Scrosati, R.A., 2017. Predator-induced shell plasticity in mussels hinders predation by drilling snails. Mar. Ecol. Prog. Ser. 573, 167–175. https://doi.org/10.3354/meps12194.
Smaal, A.C., 2002. European mussel cultivation along the Atlantic coast: production status, problems and perspectives. Hydrobiologia 484, 89–98. https://doi.org/10.1023/A:1021352904712.
South, P., Floerl, O., Jeffs, A., 2017. Differential effects of adult mussels on the retention and fine-scale distribution of juvenile seed mussels and biofouling organisms in longline aquaculture. Aquac. Environ. Interact. 9, 239–256.
Svensson, C., Jenkins, S., Hawkins, S.J., Myers, A., Range, P., Paula, J., O'Riordan, R., Åberg, P., 2004. Models of open populations with space-limited recruitment in stochastic environments: relative importance of recruitment and survival in populations of Semibalanus balanoides. Mar. Ecol. Prog. Ser. 275, 185–197. https://doi.org/10.3354/meps275185.
Underwood, A.J., Fairweather, P.G., 1989. Supply-side ecology and benthic marine assemblages. Trends Ecol. Evol. 4, 16–20. https://doi.org/10.1016/0169-5347(89)90008-6.
van Holthoon, 2004. Isolation and Identification of Kairomone(s) in the Daphnia-Scenedesmus System. (PhD thesis).
Vermeij, M.J.A., 2008. Density-Dependent Settlement And Mortality Structure The Earliest Life Phases of a Coral Population. vol. 89. pp. 1994–2004.
Weissburg, M., Smee, D.L., Ferner, M.C., 2014. The sensory ecology of nonconsumptive predator effects. Am. Nat. 184, 141–157. https://doi.org/10.1086/676644.
Witman, J.D., Lamb, R.W., Byrnes, J.E., 2015. Towards an integration of scale and complexity in marine ecology. Ecological Monographs 85 (4), 475–504.
Zuur, A.F., Ieno, E.N., Walker, N.J., Saveliev, A.A., Smith, G.M., 2009. Mixed effects models and extensions in ecology with R. Springer. https://doi.org/10.1017/CBO9781107415324.004.