Biochimica et Biophysica Acta, 597 (1980) 502—517

BBA 78678

^{31}P NUCLEAR MAGNETIC RESONANCE AND FREEZE-FRACTURE ELECTRON MICROSCOPY STUDIES ON *ESCHERICHIA COLI*

II. LIPOPOLYSACCHARIDE AND LIPOPOLYSACCHARIDE-PHOSPHOLIPID COMPLEXES

LOEK VAN ALPHEN [a,b,**], ARIE VERKLEIJ [b], ELLIOTT BURNELL [c,*] and BEN LUGTENBERG [a,b]

[a] *Department of Molecular Cell Biology,* [b] *Institute for Molecular Biology and* [c] *Department of Biochemistry, State University, Transitorium 3, Padualaan 8, 3584 CH Utrecht (The Netherlands)*

(Received July 23rd, 1979)

Key words: Lipopolysaccharide; ^{31}P-NMR; Phospholipid; Freeze-fracture

Summary

1. Freeze-fracture electron microscopy and ^{31}P-NMR spectroscopy on native and electrodialyzed lipopolysaccharide from *Escherichia coli* K12 cells, both above and below the phase transition temperature, are described.

2. Freeze-fracture electron microscopy of native lipopolysaccharide shows ribbon-like structures below (0 and 22°C) and large vesicles above (37°C) the phase transition temperature. Electrodialyzed lipopolysaccharide (sodium salt) occurs in ribbon-like structures at 0, 22 and 37°C if sodium lipopolysaccharide is hydrated in water. If sodium lipopolysaccharide is hydrated in Tris-HCl/NaCl buffer these ribbon-like structures occur only below the phase transition temperature. Above the phase transition temperature stacked sheets are observed. Moreover, in the latter case, the fracture planes contain particles and pits. Upon etching, sodium lipopolysaccharide when hydrated in water appears to form rods and when hydrated in buffer appears to form mainly stacked lamellae both above (37°C) and below (0°C) the phase transition temperature.

3. High resolution ^{31}P-NMR spectra show that the chemical shifts of the phosphorus atoms in native lipopolysaccharide differ from those in electrodialyzed lipopolysaccharide, probably due to conformational and composi-

* On leave from: Chemistry Department, University of British Columbia, Vancouver, B.C., V6T 1W5, Canada.

** Present address: Laboratorium voor Gezondheidsleer, Mauritskade 57, 1092 AD Amsterdam, The Netherlands.

tional (the disappearance of ions and (poly)electrolytes) changes.

The ^{31}P-NMR spectra of native lipopolysaccharide dispersed in Tris-HCl/NaCl buffer are very broad at 20 and at 40°C indicating little motion. At 22°C electrodialyzed lipopolysaccharide also gives a broad spectrum; at 40°C the spectrum is narrower, indicating more motion, and two peaks are visible. After dispersion in H_2O and subsequent addition of buffer, the spectrum of electrodialyzed lipopolysaccharide is narrow both at 20 and 40°C, which can be correlated with the rods observed in freeze etching.

After treatment with Ca^{2+}, electrodialyzed lipopolysaccharide shows a very broad spectrum at 40°C probably due to immobilization of the lipopolysaccharide.

4. Freeze-fracture electron microscopy and ^{31}P-NMR spectroscopy of liposomes consisting of native lipopolysaccharide and total phospholipids indicate that the phospholipids and the lipopolysaccharide are mainly organized in bilayers. Lipopolysaccharide in such liposomes undergoes more motion than in the absence of phospholipids. Ca^{2+} does not influence this behaviour.

Introduction

The outer membrane of Gram-negative bacteria contains, in addition to proteins and phospholipids, lipopolysaccharide. The latter component consists of a lipidic part called lipid A and a hydrophilic sugar chain. The overall structures of the lipopolysaccharides of *Salmonella* and *Escherichia coli* species are rather well known [1]. The structure of *E. coli* K12 lipopolysaccharide, which lacks a large part (the O-antigen) of the sugar chain, is represented schematically in Fig. 1.

Lipopolysaccharide is exclusively located in the outer monolayer of the outer membrane [4]. On the basis of freeze-fracture electron microscopy observations on cells of *E. coli* K12 strains [5], we proposed that lipopolysaccharide can occur in at least three different structures in this membrane: (i) in a lamellar orientation in the smooth fracture planes; (ii) as hemi-micelles complexed with protein (probably the predominant form in wild-type cells); and (iii) as hemi-micelles introduced by divalent cations and/or polyamines (probably almost absent in wild-type cells). The hemi-micelles are visible in freeze-fracture electron microscopy as particles on the outer fracture face ($\overset{\smile}{OM}$) with complementary pits on the inner fracture face ($\overset{\frown}{OM}$).

In this paper we describe the freeze-fracture electron microscopy of lipopolysaccharides isolated from *E. coli* K12 in order to investigate whether or not isolated lipopolysaccharide can form these different structures. Additionally, ^{31}P-NMR spectroscopy which is very informative for the structural arrangement of phosphorus-containing lipids [6] was used. Since lipopolysaccharide contains six phosphates in different chemical environments (Fig. 1) the ^{31}P-NMR spectrum contains several sets of peaks with different chemical shifts [7]. The ^{31}P-NMR spectrum observed depends on the macromolecular organization of lipopolysaccharide [7,8], for which divalent cations and (poly)electrolytes present in lipopolysaccharide preparations appear to be important [8]. Hence, we have performed experiments both with purified lipopolysaccharide,

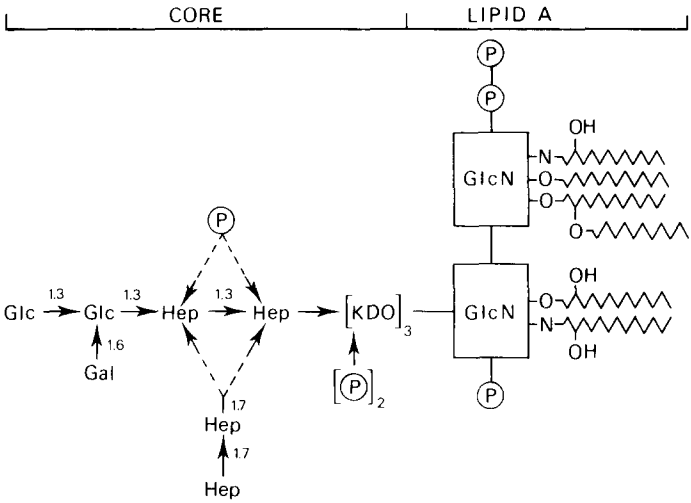

Fig. 1. Tentative structure of lipopolysaccharide of *E. coli* K12. The structure of the sugar part is derived from Prehm et al. [2] and, from the analysis present in Table I, that of the lipid A part from Hase and Rietschel [3] and from the tentative identification of the peaks of the high resolution ^{31}P-NMR spectra by comparing the peak positions with those identified in lipopolysaccharide from *Salmonella typhimurium* strain mR345, which has a structure comparable to that from *E. coli* K12 [7]. Symbols: P, phosphate; Gal, galactose; Glc, glucose; Hep, L-glycero-D-mannoheptose; KDO, 3-deoxy-D-mannooctulosonic acid; GlcN, glucosamine. -OH indicates the presence of a β-hydroxy group on the fatty acid. Fatty acids are indicated by zig-zag lines. Ethanolamines, polyamines and ions are not shown.

which contains several ions and (poly)electrolytes that are probably included in lipopolysaccharide in the cell (called native lipopolysaccharide), and also with the electrodialyzed form from which many of these ions and (poly)-electrolytes were removed and in which the negative charges were neutralized with Na^+ (called sodium lipopolysaccharide). Finally, the structural organization of lipopolysaccharide in lipopolysaccharide-phospholipid liposomes was studied. The significance of these studies for the architecture of the outer membrane of *E. coli* K12 is discussed in paper III of this series [9].

Materials and Methods

Isolation of lipopolysaccharides and phospholipids

Phospholipids were isolated from exponentially grown cells of *E. coli* K12 strain CE1163 as described in paper I [10]. Lipopolysaccharide was isolated from exponentially grown cells of strain CE1066 [11] according to the phenol/chloroform/petroleum ether/water method of Galanos et al. [12]. Phospholipids were removed from the lipopolysaccharide preparations by repeated extractions with chloroform/methanol (2 : 1). No RNA could be detected in the sample [13]. This lipopolysaccharide is called native lipopolysaccharide. Native lipopolysaccharide was dialyzed against 2 mM EDTA and 100 mM NaCl, electrodialyzed as described in Ref. 8, converted into its sodium salt with NaOH, and then lyophilized (sodium lipopolysaccharide).

Preparation of samples

Lipopolysaccharide was hydrated by vortexing either in H_2O or in 10 mM

Tris-HCl/150 mM NaCl, pH 7.4, in a final concentration of 30 mg/ml. In the first case, hydration was followed by the addition of buffer to the same final concentration. The dispersed lipopolysaccharides were incubated for 15 min at 45°C, and frozen.

Complexes of phospholipids and lipopolysaccharide were prepared basically according to the method of Nikaido et al. [14], modified as follows: phospholipids (17 mg) in chloroform were transferred to a conical centrifuge tube. The solvent was evaporated in a stream of nitrogen, and dry lipopolysaccharide The solvent was evaporated in a stream of nitrogen, and dry lipopolysaccharide (34 mg) and 0.5 ml H_2O were added. After brief ultrasonic treatment (15 s at 40 W using a Branson sonifier with a microtip) the mixture was dried at 45°C in a stream of nitrogen and the dry film was dispersed in 1 mM Tris-HCl/10 mM $MgCl_2$, pH 7.4, by ultrasonic treatment for 30 s at 45°C. After incubation for 15 min at 45°C the suspension was dried again and resuspended in 10 mM Tris-HCl/150 mM NaCl, pH 7.4, by vortexing. Large and small vesicles were separated by centrifugation for 30 min at 17 000 $\times g$ and the pellet was redispersed in 10 mM Tris-HCl/10 mM $MgCl_2$/150 mM NaCl, pH 7.4, by vortexing.

Incubation procedures

Lipopolysaccharide and lipopolysaccharide-phospholipid complexes were incubated for 15 min at 20°C with $CaCl_2$ in molar ratio of Ca^{2+} over lipopolysaccharide ranging from 0.5—10 as indicated. For high resolution NMR spectroscopy, lipopolysaccharide was suspended in 10 mM Tris-HCl, pH 7.4, sonicated briefly and then sodium dodecyl sulfate was added to a final concentration of 1%.

Freeze-fracture electron microscopy and ^{31}P-NMR spectroscopy

Both techniques were performed as described in paper I [10]. Etching was performed in the absence of glycerol. ^2H_2O was added to provide a lock signal for the ^{31}P-NMR measurements.

Analytical procedures

Standard methods have been described for the determination of 3-deoxy-D-mannooctulosonic acid [5], phosphate [15] and the alditol derivatives of lipopolysaccharide [16]. The amounts of various atoms with an atomic number larger than 20 were quantified relative to phosphorus by analytical electron microscopy [17]. The spectra were calibrated with an external standard of several metal chlorides.

Results and Discussion

Chemical characterization and freeze-fracture morphology of lipopolysaccharides

The characteristics of both sodium lipopolysaccharide and native lipopolysaccharide are summarized in Table I, which shows that some ions were removed quite effectively by electrodialysis and that the amount of phosphate remained essentially the same. This is in agreement with data obtained for *Salmonella typhimurium* [8], for which it was shown that compounds like ethanolamine and the polyamines spermine and putrescine are also removed by this treatment.

TABLE I

CHEMICAL ANALYSIS OF NATIVE AND ELECTRODIALYZED SODIUM SALT LIPOPOLYSACCHARIDE OF *E. COLI* K12 STRAIN CE1066

n.d., not determined.

Component	Lipopolysaccharide	
	Native (μmol/mg)	Sodium salt (μmol/mg)
3-Deoxy-D-mannooctulosonic acid	0.57	0.55
L-glycero-D-mannoheptose *	0.36	n.d.
Galactose	0.20	n.d.
Glucose	0.21	n.d.
Phosphate	1.14	1.27
Mg^{2+}	0.9	0.13
Ca^{2+}	0.07	0.04
Na^{+}	trace	0.8 **
K^{+}	0.13	0.05

* Determined by gas-liquid chromatography of alditol derivatives of lipopolysaccharide. Heptose residues esterified to phosphates are not detectable with this method.

** The amount of Na^{+} in sodium lipopolysaccharide is much higher than in native lipopolysaccharide due to neutralization with Na^{+} during the preparation.

Native lipopolysaccharide of *E. coli* K12 shows a phase transition from 28—31°C as measured by light scattering [13]. Therefore the freeze-fracture morphology of native and electrodialyzed (sodium salt) lipopolysaccharide was studied below and above this phase transition temperature by quenching the samples from 0 or 22°C or from 37°C, respectively. Moreover, as the hydration conditions could be important [20], sodium lipopolysaccharide was examined under two conditions, i.e. after hydration directly in Tris-HCl/NaCl buffer and after hydration in water and subsequent addition of buffer. The results are summarized in Table II.

The freeze-fracture morphology depended strongly on the experimental conditions and the chemical composition of the lipopolysaccharide preparations. At 37°C native lipopolysaccharide was organized in large unilamellar vesicles which had smooth fracture faces (Fig. 2). Below the phase transition temperature (at 0 and 22°C) [13] thin rod- or ribbon-like structures with a length of approx. 200 nm were observed. In samples of sodium lipopolysaccharide similar structures were seen if the lipopolysaccharide were first hydrated in water followed by the addition of buffer at 0 as well as at 22 and 37°C and if it were hydrated directly in Tris-HCl/NaCl buffer only below the phase transition temperature (0 and 22°C). Little tangential fracturing (splitting of the bilayer) was observed. Fig. 3A shows the morphology in the case of sodium lipopolysaccharide hydrated in buffer at 22°C.

To investigate these ribbon-like structures in more detail we have etched these samples in the absence of glycerol to detect underlying structures. As a result of too low a freezing rate, phase segregation occurred and thus the material was concentrated in small areas of the replica. In these electron micrographs sodium lipopolysaccharide hydrated in water showed at both 0 and 37°C mainly long rods with a diameter of approx. 16 nm. Fig. 3B is an illustration of these structures at 0°C. Since tangential fracturing was not observed

TABLE II

ELECTRON MICROSCOPY OF LIPOPOLYSACCHARIDE FROM *E.COLI* K12 CELLS

Lipopolysaccharide was hydrated either directly in buffer (10 mM Tris/HCl/150 mM NaCl, pH 7.4) (A) or first in water after which buffer was added up to the same final concentration (B). n.d., not determined.

Lipopolysaccharide preparation	Hydration procedure	Temperature (°C)	Morphology as observed after:		Figures
			Freeze-fracturing	Freeze-etching	
Native	A	0, 22	Ribbon-like	n.d.	Not shown
		37	Unilamellar vesicles	n.d.	Fig. 2
Electrodialyzed	B	0, 22	Ribbon-like	Long rods, smooth fracture faces with pits	Not shown
		37	Ribbon-like	Long rods, smooth fracture faces with pits	Not shown
	A	0, 22	Ribbon-like	Stacked lamellae, smooth fracture faces with pits	Fig. 3C
		37	Stacked lamellae, single sheets, particles and pits	Stacked lamellae, smooth fracture faces with pits	Fig. 4

Fig. 2. Freeze-fracture electron micrograph of native lipopolysaccharide hydrated in buffer at 37°C. The arrow indicates the direction of shadowing. The bar represents 200 nm.

with freeze-fracturing this may mean that bilayers are not present. The rods which were only visualized upon etching could then be interpreted as cylinders with a hexagonal I symmetry in which the fatty acyl chains of sodium lipopolysaccharide are directing inward and the sugar chains are extruding. Moreover, between the rods, smooth etch faces with pits were visible (Fig. 3B). The significance of the latter morphology is not understood. Rod-like structures have been observed previously in preparations of native wild-type lipopolysaccharide from *S. typhimurium* after negative staining [18].

Although sodium lipopolysaccharide hydrated in Tris-HCl/NaCl buffer showed ribbon-like structures upon fracturing below the phase transition temperature (as did sodium lipopolysaccharide hydrated in water below and above the phase transition), the morphology after etching was different from that of sodium lipopolysaccharide hydrated in water as shown in Fig. 3C. Mainly stacked sheets were observed upon etching in the absence of glycerol, probably as a result of phase segregation which caused lipopolysaccharide to

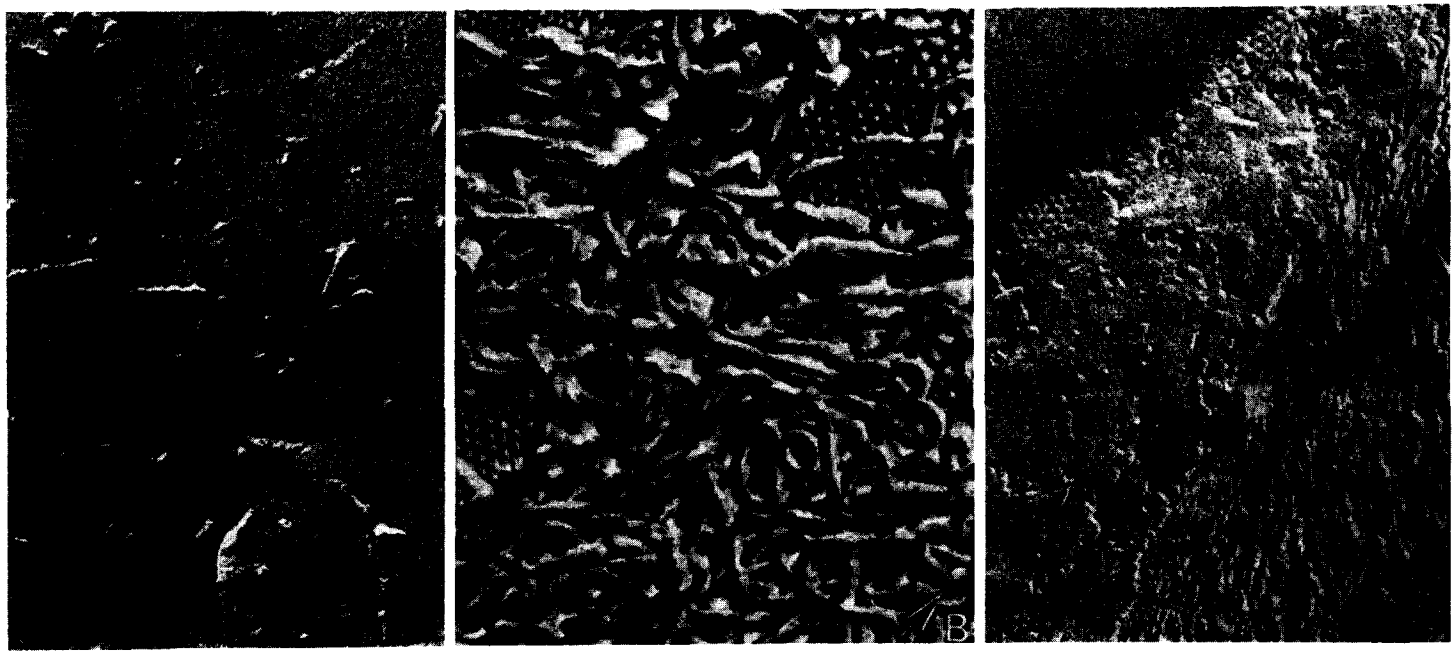

Fig. 3. (A) Freeze-fracture electron micrographs of sodium lipopolysaccharide hydrated in buffer at 22°C. The freeze-fracture morphology of sodium lipopolysaccharide hydrated in water at 0, 22 and 37°C and of native lipopolysaccharide hydrated in buffer at 22 or 0°C is similar. (B) Electron micrograph, after freeze-etching for 2 min, of sodium lipopolysaccharide in water at 0°C and (C) of sodium lipopolysaccharide hydrated in buffer at 0°C after etching for 1 min. The results after freeze-etching were similar at 22 or 37°C. The arrow indicates the direction of shadowing. The bar represents 200 nm. Symbol: ES, etched surface.

concentrate in small areas of the replica as was found for sodium lipopolysaccharide hydrated in water. Again, smooth surfaces with pits were observed on the etch face (compare Figs. 3B and C).

Sodium lipopolysaccharide hydrated in buffer and then freeze-fractured (in the presence of glycerol) above (37°C) the phase transition temperature appeared to be mainly organized in stacked lamellae (Fig. 4A). In this case the occurrence of stacked lamellae was not a result of phase segregation as glycerol is always present in these freeze-fracturing experiments but this morphology is probably a result of a temperature-dependent phase transition [13]. In addition to the stacked sheets, single sheets were observed (Fig. 4B) and, most interestingly, particles and pits (Fig. 4C) occurred on the tangential fracture faces. The particles and pits often occurred in ridges. In this respect it should be noted that sodium lipopolysaccharide still contains some calcium and magnesium. It has been suggested that in cells lamellar lipopolysaccharide can be converted into particles and pits by the presence of Ca^{2+} and Mg^{2+} [5]. Therefore we have looked at 37°C for particles and pits after the addition of extra Ca^{2+} (0.5 to 10 Ca^{2+} per lipopolysaccharide) to sodium lipopolysaccharide hydrated in buffer. Indeed, we observed particles and pits which were morphologically indistinguishable from those observed in the absence of calcium. However, it is impossible to examine whether the number of particles and pits is changed after the addition of Ca^{2+} since the amount of tangential fracture faces is rather small, especially in the absence of Ca^{2+}.

From the variety observed in the morphology of sodium lipopolysaccharide at 37°C (Fig. 4) it can be concluded that sodium lipopolysaccharide is heterogeneous, even though the electrodialysis was continued until no further changes in the pH of the reservoirs could be detected. Heterogeneity in the lipopolysaccharide preparations is also demonstrated in the ^{31}P-NMR high resolution spectra (see below) and has been observed with respect to the lipid A part of *Serratia marcescens* [19], the number of phosphate groups [7] and the composition of the sugar chain [1].

The results clearly show that purified lipopolysaccharide is able to adopt a configuration which gives rise to particles and pits. Although this, of course, does not prove that lipopolysaccharide is organized in the same way in the outer membrane [5], we find it important to note that the particles and pits observed in the outer membrane of *E. coli* K12 have a morphology similar to those in purified lipopolysaccharide of these cells.

^{31}P-NMR spectroscopy of lipopolysaccharide

Since lipopolysaccharide contains six phosphate groups per molecule (Table I and Fig. 1) it can be expected that it will be difficult to analyze the general features of the overall ^{31}P-NMR spectrum in terms of macroscopic organization, such as bilayer, hexagonal and isotropic components. In order to be able to interpret further the physical state of lipopolysaccharide in the outer membrane of *E. coli* (to be considered in paper III [9]) ^{31}P-NMR spectroscopy was performed on lipopolysaccharide under varying conditions for which the freeze-fracture morphology has been described above.

To identify the phosphorus resonances, the high resolution spectra of native lipopolysaccharide and sodium lipopolysaccharide solubilized in sodium

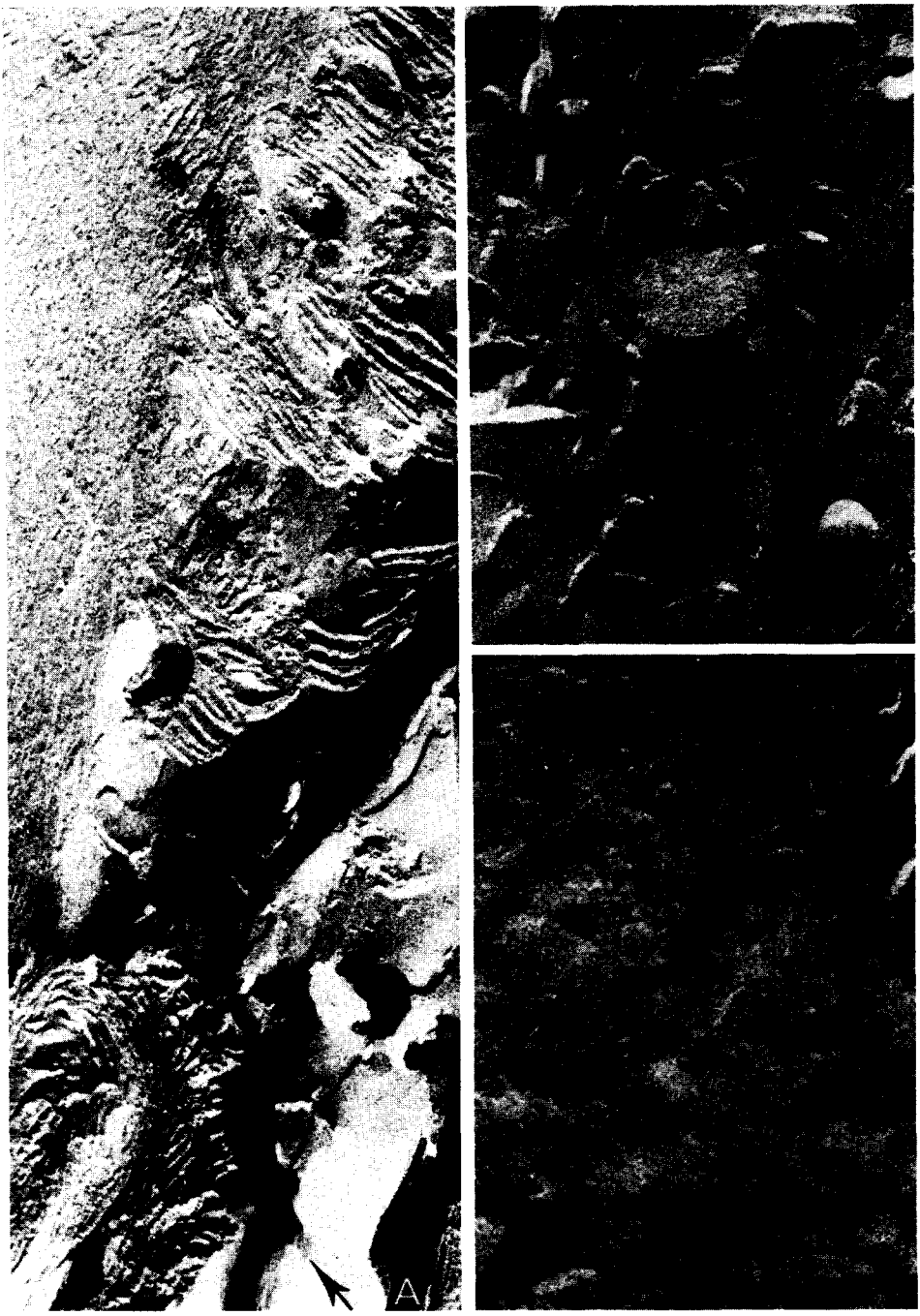

Fig. 4. Freeze-fracture electron micrographs of predominantly (A) and scarcely (B,C) occurring forms of lamellar sodium lipopolysaccharide hydrated in buffer at 37°C. Note that cross-fracturing and tangential fracturing occur next to each other. The particles and pits observed in (C) are also observed after treatment with Ca^{2+}. The arrow indicates the direction of shadowing. The bar represents 200 nm.

dodecyl sulfate are shown in Fig. 5. Both spectra consist of three separate regions which on the basis of the integrated intensity represent about two of the six phosphate groups each. The spectra also indicate that the lipopolysaccharide is heterogeneous, as there are too many lines to represent a single type of molecule containing only six phosphate groups. This heterogeneity might represent different conformations of lipopolysaccharide. The most notable differences between the spectra of native lipopolysaccharide and sodium lipopolysaccharide are in the peak positions in the middle of the spectrum. The peaks around +9 ppm in sodium lipopolysaccharide were shifted approx. 2 ppm upfield compared to native lipopolysaccharide. The spectral changes indicate that the chemical environment and/or conformation of some of the phosphates are changed by the electrodialysis procedure in which ions and compounds such as ethanolamine and several polyamines are removed (Table I and Ref. 8).

The broader line ^{31}P-NMR spectra of lipopolysaccharide are shown in Fig. 6, where it can be seen that the spectrum obtained depends not only on the type of lipopolysaccharide used, but also on the hydration procedure. When sodium lipopolysaccharide was first dispersed in water and buffer subsequently added, the spectrum at 20°C (Fig. 6D) was broad and contained two peaks which occur at approximately the same position as the average of the peaks in the high resolution spectrum (Fig. 5A). At 40°C (Fig. 6C), which is certainly above the phase transition as measured by light scattering [13], the position of the peaks was similar (the larger peak has shifted slightly to higher field). The spectrum is much narrower, indicating more motion at 40°C possibly because

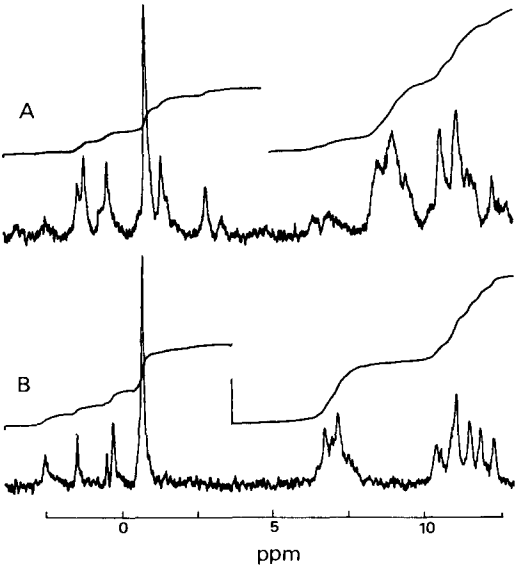

Fig. 5. 36.4 MHz high resolution ^{31}P-NMR spectra of solutions in 1% sodium dodecyl sulfate of sodium lipopolysaccharide (A) and native lipopolysaccharide (B). $^{2}H_2O$ was used to provide a lock signal and the scale is relative to 85% orthophosphoric acid. The integrated intensity of the spectral features is indicated above the spectra. $T = 35°C$.

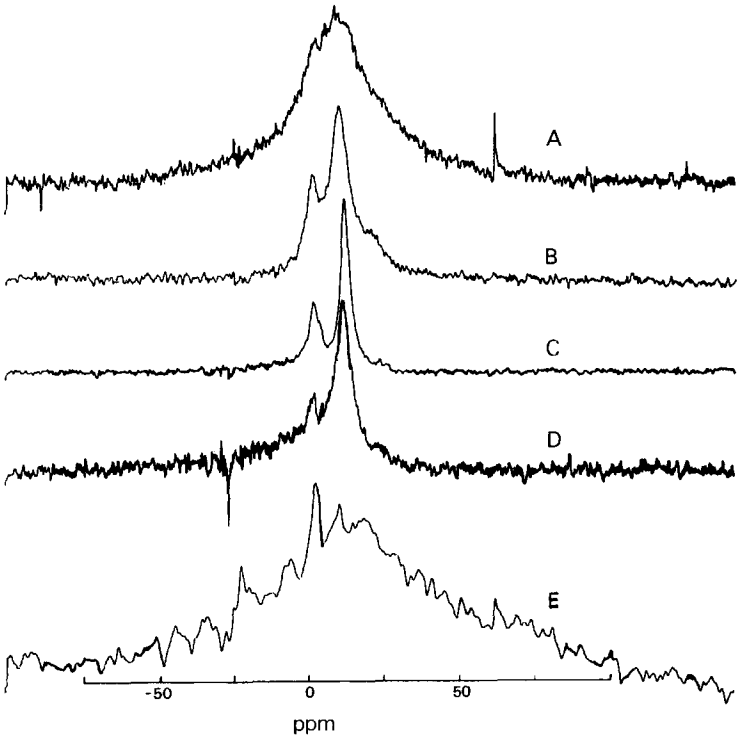

Fig. 6. 36.4 MHz ^{31}P-NMR spectra of aqueous dispersions of native lipopolysaccharide at 40°C (A), sodium lipopolysaccharide dispersed in buffer at 40°C (B), sodium lipopolysaccharide dispersed in H_2O (before adding buffer) at 40 (C) and 20°C (D) and sodium lipopolysaccharide dispersed in H_2O after incubation with Ca^{2+} (molar ratio of Ca^{2+} over sodium lipopolysaccharide = 10) at 40°C (E). All dispersions were in 10 mM Tris-HCl/150 mM NaCl, pH 7.4, containing ^2H_2O to provide a lock signal. Zero ppm refers to 85% orthophosphoric acid.

the phase transition represents a gel-to-liquid crystalline transition [20]. However, when sodium lipopolysaccharide was hydrated directly into Tris/NaCl buffer the spectrum at 20°C is almost as broad as that of native lipopolysaccharide at the same temperature. At 40°C (Fig. 6B) it differed from that of the previous sample (at 40°C) in that there is less intensity in the sharper parts of the spectrum. Also, the right-hand peak is shifted slightly to lower field, both compared with sodium lipopolysaccharide hydrated in H_2O (about 2 ppm) and with the higher field sets of high resolution peaks in Fig. 5A. The slight shifts of the high field peak could be due to either changes in the macroscopic structural organization of sodium lipopolysaccharide or to charge effects caused by the hydration procedure.

Native lipopolysaccharide dispersed in buffer gave a broad spectrum (Fig. 6A) which is identical at both 20 and 40°C. The width of the spectrum indicates that the material removed by electrodialysis immobilizes the lipopolysaccharide.

The addition of Ca^{2+} to the sodium lipopolysaccharide sample hydrated in buffer (in a molar ratio of 10 Ca^{2+} to 1 lipopolysaccharide) yields an even broader spectrum than that obtained for native lipopolysaccharide (Fig. 6E, where the spectrum is certainly distorted because of the use of a high resolu-

tion spectrometer with 0.1 ms dead time and 4 μs pulse width and only 20 W broadband ^{1}H decoupling power). The ^{31}P-NMR spin-lattice relaxation time was long for this sample (as indicated by severe signal saturation when 170 ms pulse spacing was used). It is thus quite likely that this spectrum represents completely immobilized (solid) lipopolysaccharide especially since Ca^{2+} is known to precipitate lipopolysaccharide completely [8] and that native lipopolysaccharide has considerable motion at 40°C. There are no special features in this spectrum that can be associated with the particles and pits observed in the freeze-fracture electron microscopy of this sample (Fig. 4C). Hence, the particles and pits probably contain immobilized lipopolysaccharide.

The general conclusion to be drawn from these experiments is that it is highly likely that in sodium lipopolysaccharide the molecules are undergoing more extensive motion than in native lipopolysaccharide. It is very unlikely that in the case of sodium lipopolysaccharide hydrated directly in buffer this extra motion is isotropic tumbling of the ribbon fragments (Fig. 3C) since these (bilayer) ribbons had a large size. Therefore the motions are probably intra- and/or intermolecular motions. For the spectrum of sodium lipopolysaccharide in water, which is mainly in rods (Fig. 3B) as observed after freeze etching, the change in broad line spectral shape could be associated with the cylindrical structures, which would be suspected of giving rise to 'hexagonal' phase NMR spectra, due to the motion of the molecules perpendicular to the axis of the cylinder. Native lipopolysaccharide is undergoing some non-isotropic motion (compare Figs. 6A and 6E) as seen from the spectral width and shape. This type of motion probably involves rotation about the normal to the bilayer.

Freeze-fracture electron microscopy and ^{31}P-NMR spectroscopy of lipopolysaccharide-phospholipid liposomes

The outer membrane of *E. coli* contains lipopolysaccharide and phospholipids in a strongly asymmetric distribution [4,21]. In a number of protein and lipopolysaccharide mutants part of the phospholipid occurs next to lipopolysaccharide in the outer monolayer of the membrane [21]. Therefore, liposomes consisting of lipopolysaccharide and total phospholipids of *E. coli* K12 were studied. Native lipopolysaccharide was used since this has the strongest resemblance with lipopolysaccharide in the membrane from a NMR point of view (see paper III [9]). At 37°C the electron microscopy showed only multilamellar structures with fissures and ridges with a diameter of 8—10 nm (Fig. 7). In contrast to dispersions of total phospholipids (Fig. 2 of paper I [10]), neither hexagonal phases nor particles were detected. The ^{31}P-NMR spectrum (Fig. 8) indicates that the phospholipids are mainly organized as a bilayer (compare with Fig. 1A of paper I [10]). The broad underlying spectrum of lipopolysaccharide appears narrower than that in Fig. 6A for native lipopolysaccharide. From the freeze-fracture results, it is very likely that this spectrum indicates a phospholipid/lipopolysaccharide bilayer, where the lipopolysaccharide has more mobility (a lower order parameter) than in the pure native state, but less than in the case of sodium lipopolysaccharide. In the spectrum in Fig. 8 there is a small peak at the position for isotropic phospholipid motion. This is probably due to a small amount of isotropic phospholipid but could also

Fig. 7. Freeze-fracture electron micrograph of a dispersion of native lipopolysaccharide and phospholipid in 10 mM Tris-HCl/150 mM NaCl/10 mM $MgCl_2$, pH 7.4. The arrow indicates the direction of shadowing. The bar represents 200 nm.

arise from isotropic lipopolysaccharide or from a singularity of the oriented lipopolysaccharide spectrum.

It can be concluded that the phospholipids increase the motional freedom of native lipopolysaccharide, probably by interference with the lipopolysaccharide-lipopolysaccharide interactions as suggested by Fried and Rothfield

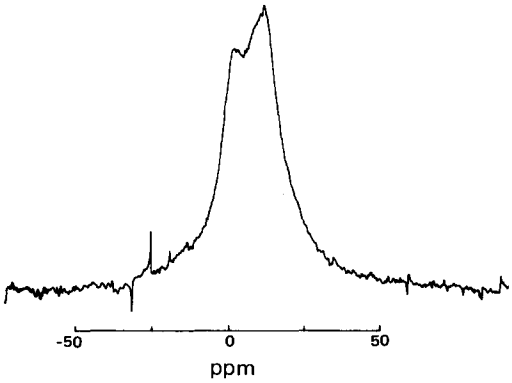

Fig. 8. 36.4 MHz ^{31}P-NMR spectra of the phospholipid-native lipopolysaccharide liposomes of Fig. 7 with $^{2}H_2O$ as lock signal. $T = 37^{\circ}C$.

[22]. It should be noted that the spectrum did not change after incubation of the liposomes with 0.1 M $CaCl_2$, indicating that Ca^{2+} is no longer able to cross-link the lipopolysaccharide molecules into a solid-like structure as was found after incubation of lipopolysaccharide with Ca^{2+} (compare with Fig. 6E).

In addition to this effect of the phospholipids on the fluidity of native lipopolysaccharide in lipopolysaccharide-phospholipid liposomes, lipopolysaccharide forces the phospholipids into a lamellar phase since isolated phospholipids were mainly isotropically and hexagonally organized at this temperature (37°C) (Fig. 1C in paper I [10]). The mutual effects of phospholipids and lipopolysaccharides on each other indicate that lipopolysaccharide and the total phospholipids form mixed bilayers.

Concluding remarks

The freeze-fracture electron microscopy revealed that almost all the molecules in a preparation of pure lipopolysaccharide hydrated in buffer are in a lamellar state (either in ribbons, in stacked lamellae or in large vesicles) (Figs. 2 and 3) and some (of the sodium lipopolysaccharide dispersed in buffer) is in particles (Fig. 4C). Therefore, lipopolysaccharide is probably playing a structural role in the outer membrane of *E. coli*, in which lipopolysaccharide is thought to occur in a lamellar organization and in particles [5]. Investigations on the structure of lipopolysaccharide in the outer membrane are described in paper III [9].

Different ^{31}P-NMR spectra were obtained for these lamellar lipopolysaccharide preparations. These spectra indicate differences in motional freedom (order parameter) of part of the lipopolysaccharide preparations in the following order of increasing motion (at 40°C):

Ca^{2+} LPS < native LPS < NaLPS (buffer)

Moreover, it was observed that the chemical shift in the right peak of the spectra decreases in that same order, which would agree with the above changes in order parameter. This shift could also represent increasing amounts of a certain organization of lipopolysaccharide in the bilayer (possibly in a state in which the molecules are oriented in parallel) with a decrease in the number of lipopolysaccharide molecules that have isotropic motions. These isotropic lipopolysaccharide molecules were not visible in freeze-fracture electron microscopy in the way described above.

Particles could well be responsible for isotropic features in the spectra in addition if the broad-line part (Fig. 6) represents lamellar phase lipopolysaccharide observed in freeze-fracturing. Then it is obvious that sodium lipopolysaccharide dispersed in buffer at 40°C, under which condition particles were seen (Fig. 4C), has more of the isotropic component than native lipopolysaccharide at 40°C where particles were not observed. The broad-line signal of sodium lipopolysaccharide incubated with Ca^{2+} is due to the immobilization of the lipopolysaccharide.

Acknowledgements

We thank Dr. P.F. Elbers for performing the analytical electron microscopy measurements. The technical assistance of Ria van Boxtel and José Leunissen-

Bijvelt is gratefully acknowledged. We are grateful to Dr. B. de Kruijff for helpful discussions. One of us (E.B.) wishes to thank the Netherlands Organization for the Advancement of Pure Research (Z.W.O.) and the National Research Council of Canada for financial support.

References

1 Galanos, C., Lüderitz, O., Rietschel, E.T. and Westphal, O. (1977) Int. Rev. Biochem. 14, 239—335
2 Prehm, P., Stirm, S., Jann, B., Jann, K. and Boman, H.G. (1976) Eur. J. Biochem. 66, 369—377
3 Hase, S. and Rietschel, E.Th. (1976) Eur. J. Biochem. 63, 101—107
4 Mühlradt, P.F., Menzel, J., Golecki, J. and Speth, V. (1973) Eur. J. Biochem. 35, 471—481
5 Van Alphen, L., Verkleij, A., Leunissen-Bijvelt, J. and Lugtenberg, B. (1978) J. Bacteriol. 134, 1089—1098
6 Cullis, P.R. and de Kruijff, B. (1978) Biochim. Biophys. Acta 507, 207—218
7 Mühlradt, P.F., Wray, V. and Lehmann, V. (1977) Eur. J. Biochem. 81, 193—203
8 Galanos, C. and Lüderitz, O. (1975) Eur. J. Biochem. 54, 603—610
9 Burnell, E., van Alphen, L., Verkleij, A., de Kruijff, B. and Lugtenberg, B. (1980) Biochim. Biophys. Acta 597, 518—532
10 Burnell, E., van Alphen, L., Verkleij, A. and de Kruijff, B. (1980) Biochim. Biophys. Acta 597, 492—501
11 Verhoef, C., de Graaff, P.J. and Lugtenberg, E.J.J. (1977) Mol. Gen. Genet. 150, 103—105
12 Galanos, C., Lüderitz, O. and Westphal, O. (1969) Eur. J. Biochem. 9, 245—249
13 Van Alphen, L., Lugtenberg, B., Rietschel, E.Th. and Mombers, C. (1979) Eur. J. Biochem. 101, 571—579
14 Nikaido, H., Takeuchi, Y., Ohnishi, S.I. and Nakae, T. (1977) Biochim. Biophys. Acta 465, 152—164
15 Ames, B.N. and Dubin, D.T. (1960) J. Biol. Chem. 235, 769—775
16 Holme, T., Lindberg, A.A., Garegg, P.J. and Oun, T. (1960) J. Gen. Microbiol. 52, 45—54
17 Hall, T.A. (1971) in Physical Techniques in Biological Research, Vol. 1A. Optical Techniques (Oster, G., ed.) pp. 157—275, Academic Press, New York
18 Shands, J.W. (1971) in Microbial Toxins IV, Bacterial Endotoxins (Weinbaum, G., Kadis, S. and Ajl, S.J., eds.), pp. 127—144
19 Nowotny, A. (1971) Microbial Toxins IV, Bacterial Endotoxins, (Weinbaum, G., Kadis, S. and Ajl, S.J., eds.), pp. 309—330
20 Emmerling, G., Henning, U. and Gulik-Krzywicki, T. (1977) Eur. J. Biochem. 78, 503—509
21 Van Alphen, L., Lugtenberg, B., van Boxtel, R. and Verhoef, K. (1977) Biochim. Biophys. Acta 466, 257—268
22 Fried, V.A. and Rothfield, L.I. (1978) Biochim. Biophys. Acta 514, 69—82