JACC Vol. 4, No. 2
August 1984:239–44

METHODS

The Concept of Apparent Cardiac Arrest as a Prerequisite for Coronary Digital Subtraction Angiography

TJEERD VAN DER WERF, MD, ROBERT M. HEETHAAR, PhD, HERMAN STEGEHUIS, MSc, FRITS L. MEIJLER, MD, FACC, with the technical assistance of MAX VAN DER MARK

Utrecht, The Netherlands

This study was undertaken to evaluate the possible use of digital subtraction applied after selective coronary arteriography. An identical position of the objects with and without contrast medium is an absolute requirement for the application of subtraction techniques. Because coronary arteries are in continuous motion, the subtraction technique cannot be applied without certain precautions. In our study, only images from corresponding moments in the cardiac cycle before and after contrast injection were matched for subtraction, that is, the concept of apparent cardiac arrest. To prevent variations in cardiac contractions due to varying RR intervals, heart rate was controlled by regular right atrial stimulation. Moreover, the stimulation rate and cine frequency were in synchrony, which was effected by triggering both on the frequency of the electric main alternating current (50 cycles/s). In this way, each cardiac cycle contains exactly the same number of frames at corresponding moments.

A combination of the application of the concept of apparent cardiac arrest with the subtraction technique in 12 patients resulted in good quality images. Furthermore, better visualization of capillary filling with contrast material was obtained than with conventional coronary arteriography.

Image subtraction was introduced into radiologic practice over 40 years ago by Ziedzes des Plantes (1). At that time, this method of direct negative-positive subtraction, applied to large films, was used to enhance the image quality of films with poor definition. In recent years, Mistretta et al. (2) and numerous others applied essentially the same principle to various fields of radiology by computer handling of X-ray images. These systems proved to be so powerful that it was not only possible to enhance image quality of poorly defined structures, but it became possible to extend the objectives to comprise goals such as reducing contrast medium volume, reducing radiation dose and administering the contrast material for imaging of arteries intravenously, thus obviating selective arterial catheterization.

Application of the subtraction principle requires an identical position of the object with and without contrast medium, as well as the same background in the images to be subtracted. The continuous motion of the coronary arteries and the continuously changing volume of the cardiac cavities prohibit the simple application of subtraction techniques that have been developed for peripheral vessels to the coronary artery tree.

The first purpose of this study was to obtain high quality images of the coronary arteries using subtraction techniques. We attempted to overcome the motion artifacts with what is called "apparent cardiac arrest." In this first attempt, we did not consider reducing contrast volume or radiation dose or nonselective injection of the contrast agent. The second objective was to study visualization of myocardial capillary filling with contrast material.

Methods

Basic principle underlying the concept of apparent cardiac arrest. The causes of motion of an object and changes in background can be divided into evitable and inevitable causes (Table 1). Table motion (known as "panning") is evitable. The patient can be instructed not to move and can be trained to hold his or her breath at a constant level during the cine run. The automatic brightness control unit of the X-ray equipment can be locked; otherwise, changes

From the Departments of Cardiology and Medical Physics, University Hospital and State University, Utrecht, The Netherlands. This study was supported by the Interuniversity Cardiology Institute (ICI), Utrecht and by The Netherlands Organization for the Advancement of Pure Research (ZWO), The Hague. The data were presented in part at the 32nd Annual Scientific Session of the American College of Cardiology, New Orleans, March 1983. Manuscript received December 27, 1983; revised manuscript received March 7, 1984, accepted March 29, 1984.

Address for reprints: Tjeerd van der Werf, MD, Department of Cardiology, University Hospital and State University, Utrecht, 101 Catharijnesingel, 3511 GV Utrecht, The Netherlands.

0735-1097/84/$3.00

JACC Vol. 4, No. 2
August 1984:239–44

Table 1. Causes of Motion of the Object and Changes in Background in Coronary Angiography

Evitable
Table motion ("panning")
Patient motion
Respiration
Automatic brightness control
Inevitable
Cardiac contractions

in radiation dose will occur after the injection of contrast agent. On the other hand, cardiac contractions causing motion of the object (the coronary arteries) and changes in background (the volume of the cardiac cavities and the ventricular myocardium) are inevitable and complicate the application of subtraction techniques. To cope with these problems, we developed the concept of apparent cardiac arrest in which contrast and noncontrast images are subtracted only if they have been obtained at comparable moments in the cardiac cycle, as if the heart was arrested. This approach requires a regular heart rate and synchrony between heart rate and cine frequency.

Practical realization of the concept of apparent cardiac arrest. A regular heart rate was obtained by stimulating the heart at a frequency slightly above the sinus rate by means of an externally triggered stimulator with a pacing catheter positioned against the right atrial wall. The reason for the use of the external trigger is explained later. With the X-ray equipment, 50 or 25 film frames/s are made in synchrony with the frequency of the electric main alternating current (50 cycles/s in Europe). To achieve synchrony between X-ray film frames and heart rate, the stimulator is also triggered at the frequency of the alternating electric current. Therefore, the main current's signal is fed into an electronic circuit that delivers a short pulse each time the main voltage exceeds a certain value, resulting in a pulse sequence with 20 ms between the successive pulses. Adequate selection (by division) of these pulses results in a pulse train that is fed into the external input of the stimulator leading to intervals that are multiples of 20 ms. Optical insulation units prevent leakage currents according to international safety standards. The principle of apparent cardiac arrest is shown schematically in Figure 1.

Catheterization procedure. Twelve patients underwent cardiac catheterization according to the percutaneous Seldinger technique. Coronary artery injections were performed using 5 to 7 ml metrizoate (Isopaque coronar) through right or left Judkins catheters. The films were made with Siemens X-ray equipment using a focal spot of 0.6 mm at about 70 kVp and a current of about 100 mA. The automatic brightness control unit was switched off. Kodak film (2496 RAR) was used with a gradient of about 1.65. The film used for subtraction was made during routine coronary arteriography with informed consent of the patients. The conventional

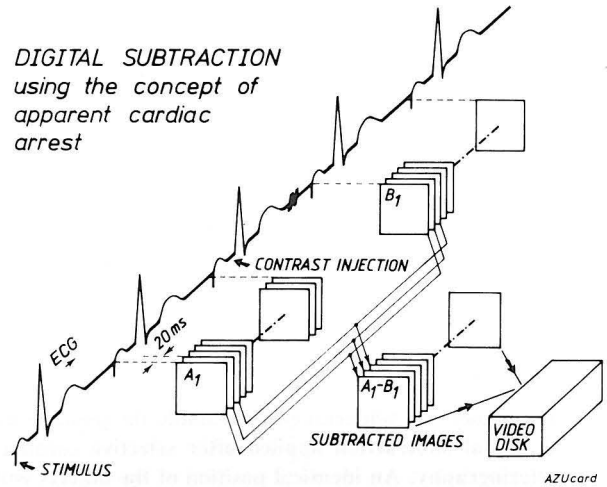

Figure 1. The principle of apparent cardiac arrest. ECG = electrocardiogram. For explanation, see text.

arteriograms were read by a cardiologist (T. vdW.) immediately after development. The subtraction procedure was executed by the engineers (H.S. or M. vdM.) 1 to 3 months later. Thereafter, the subtracted arteriograms were read in a blinded fashion by the same cardiologist who had read the conventional films and the results compared with the original description.

Subtraction procedure. In the laboratory, the film was analyzed in an off-line mode. It was put on a spooler, equipped with a microprocessor-controlled drivemotor. After identification of the first frame, the number of the frame wanted was dialed in with the aid of thumbwheels, after which the motor transported the film to this frame. The video signals, obtained with a Vidicon high resolution camera with locked automatic light compensation, were connected to an image analysis system (VICOM) (Fig. 2). After analog to digital conversion, comparable noncontrast and contrast images were fed into memory I and II, respectively,

Figure 2. Schematic presentation of the equipment used for analyzing the film. A/D and D/A = analog to digital and digital to analog conversion, respectively. For further explanation, see text.

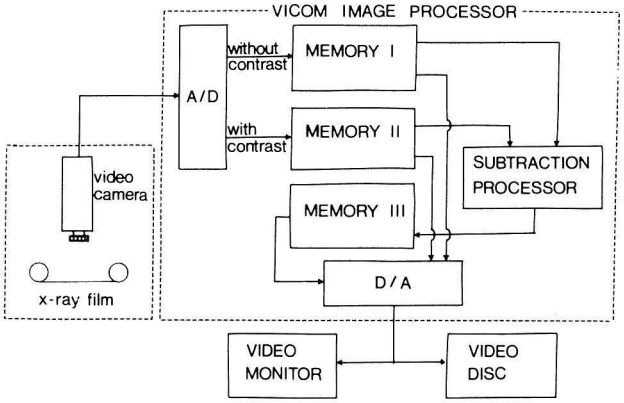

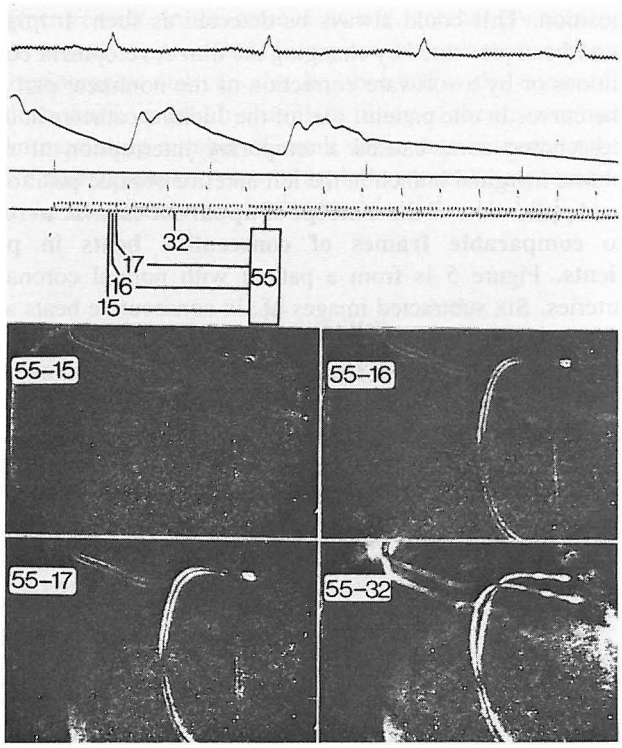

Figure 3. Demonstration of the need to apply the concept of apparent cardiac arrest. For explanation, see text.

with a spatial resolution of 512 × 512 and 256 gray levels. Subtraction was performed and the result stored in memory III. For better visual inspection, the gray levels of the resulting images were amplified by a factor 4 or 8. After digital to analog conversion, the results could be displayed on a video monitor and stored on a video disc.

Results

Demonstration of the relevance of the concept of apparent cardiac arrest. The need to apply the concept of apparent cardiac arrest to avoid errors in the coronary subtraction procedure is demonstrated in Figure 3 in which the most simple situation of two consecutive beats during the noncontrast phase is considered. The upper panel shows right atrial paced heartbeats together with a cinepulse recording. Exactly 40 frames were taken per heartbeat. In the right lower picture, the consequence of subtraction of intentionally mismatched frames is shown: an end-systolic frame (no. 32) is subtracted from an end-diastolic frame (no. 55). The result of the subtraction is an example of a failure. The Judkins catheter and the stimulation catheter are clearly visible, even in two different positions. Furthermore, two white areas are discernible, although no contrast medium has been injected. On the other hand, the left upper frame represents the result of the correctly executed subtraction procedure according to the concept of apparent cardiac arrest: frame 55 minus 15, both taken at end-diastole. The subtracted frame is nearly totally black as it should be, because no contrast medium was injected until that moment. Only the electrodes of the stimulation catheter are visible.

The right upper and left lower frames of Figure 3 demonstrate what occurs if frames are subtracted with a mismatch in the cardiac cycle of only 20 or 40 ms, respectively. The catheters become visible and, in the left lower frame, white areas can be seen, falsely suggesting myocardial staining by contrast material.

Application of the concept of apparent cardiac arrest to all frames within one cardiac cycle in 12 patients. In Figure 4, a frame taken from a conventional coronary arteriogram is compared with the same frame subjected to the subtraction procedure. The narrowings in the coronary arteries seen in the conventional arteriogram can be appreciated in the subtracted arteriogram with increased conspicuousness. In the 12 patients, one full cycle was analyzed with the described subtraction procedure. Table 2 summarizes the results of the two ways of examining the coronary arteries. Only three discrepancies were encountered. In two patients, this concerned only minor wall irregularities, and in one other patient a 50 to 70% stenosis at the origin of a small diagonal branch was observed on the subtraction film but was not visible in the conventional film. All important

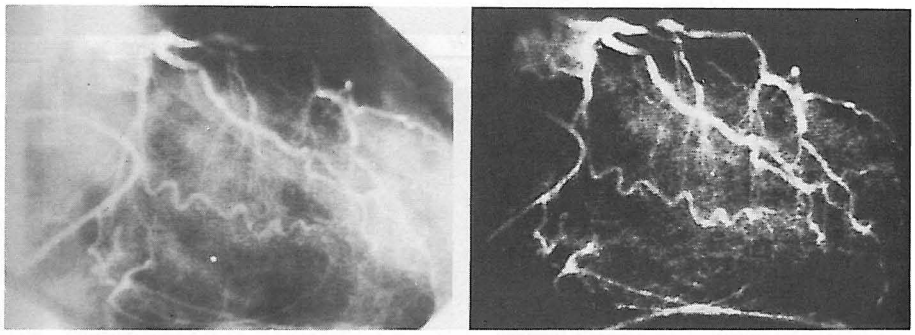

Figure 4. Comparison of a frame taken from a conventional coronary arteriogram (**left**) with the same frame subjected to the subtraction procedures (**right**). Both frames were taken from the screen of the monitor (Fig. 2) with the same diaphragm and exposure time of the camera to make them suitable for comparison.

JACC Vol. 4, No. 2
August 1984:239–44

Table 2. Coronary Artery Abnormalities Observed in 12 Patients

Coronary Angiographic Diagnosis	With Normal Film	With Subtracted Images
Wall irregularities	2	4 (= +2)
< 50% stenosis	8	8
50 to 70% stenosis	9	10 (= +1)
70 to 90% stenosis	7	7
Subtotal occlusion	3	3
Total occlusion	3	3
Aneurysm	1	1
Total	33	36

stenoses were correctly identified, as well as all cases in which collateral circulation was present.

In three patients, an apparent interruption of the circumflex artery could be seen, caused by projection of the stimulation catheter over this vessel in the right anterior oblique position. This could always be detected as such. It might have been prevented by changing the film development conditions or by a software correction of the nonlinear part of the curve. In one patient, part of the Judkins catheter in the descending aorta caused a temporary interruption of the obtuse marginal branch in the left anterior oblique position.

Application of the concept of apparent cardiac arrest to comparable frames of consecutive beats in patients. Figure 5 is from a patient with normal coronary arteries. Six subtracted images of six consecutive beats are shown. Observing the requirements for apparent cardiac arrest, all these images are chosen at comparable moments in the cardiac cycle. In the first three frames, the progressive filling of the left coronary artery can be seen. In the last three frames, the contrast material is disappearing from the

Figure 5. A series of six frames subjected to the subtraction procedure, taken at comparable moments of six consecutive heartbeats as indicated in the **top panel**. For further explanation, see text.

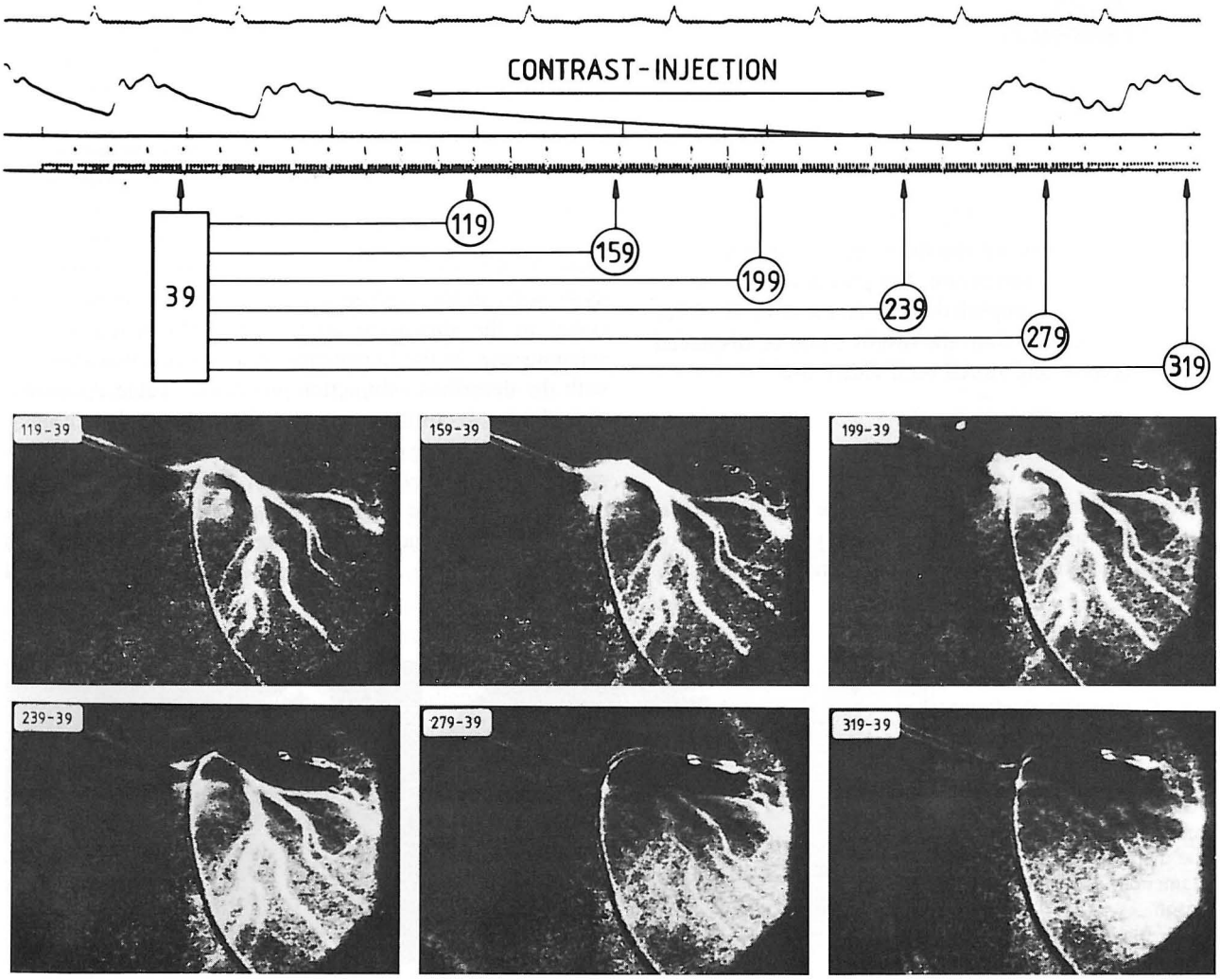

larger vessels. In the same sequence, another phenomenon not usually appreciated during routine selective coronary arteriography that can also be observed is the myocardial blush that is caused by capillary filling of the myocardium. An increasing number of small white dots is seen, leading to a rather complete view of the left ventricular myocardium in the last frame.

Discussion

In this study, we demonstrated that it is technically possible to apply the subtraction principle to angiography of the coronary artery tree. Because of the motion of the coronary arteries and the changes in the background (both due to cardiac contractions), special precautions must be taken. To obtain valuable results, it is necessary to subtract frames from each other that are taken at exactly comparable moments in the cardiac cycle before and during the contrast phase. To obtain this exact comparability, a regular heart rate and synchrony between heart rate and cine frequency are necessary. We call this procedure, supplementary to the conventional subtraction technique, apparent cardiac arrest.

Objectives of the subtraction technique. Application of a subtraction method can have several objectives: 1) to enhance conspicuousness of coronary artery images; 2) to extract more or less hidden information from the coronary arteriogram; 3) to reduce contrast volume; 4) to reduce radiation dose; and 5) to avoid selective coronary artery catheterization.

Results compared with conventional angiography. We demonstrated that the first two objectives were obtained. In the absence of a true reference standard for living coronary anatomy, standard cineangiographic techniques have to function as such. Because the subtracted images were derived from such pragmatic standards, they cannot contain more information than conventional coronary arteriograms. Table 2 demonstrates that the results are at least as good for assessing the degree of important coronary stenoses as is conventional coronary arteriography. The subtracted coronary artery images, however, show an increased black-white contrast, allowing enhanced visual perception and facilitating the appreciation of their clinical significance.

Capillary filling and myocardial staining. We demonstrated that the application of the subtraction technique with apparent cardiac arrest intensifies myocardial staining. Further studies are needed to evaluate the functional and clinical significance of this phenomenon. In the past (3,4), it was demonstrated that the contrast medium not only passes the capillaries, but also invades the surrounding perivascular space and that the concentration-time curve of myocardial staining is also dependent on other factors aside from perfusion alone. A reduction in contrast volume to avoid myocardial depression after contrast injection into the coronary arteries, especially in high-risk patients, does not seem to be a primary motive for performing the subtraction technique. The use of recently introduced contrast agents (5), although they are about four times as expensive as the conventional ones, is cheaper than developing a subtraction system for this reason only.

Reducing radiation dose. This objective may be considered a good reason for using the subtraction technique, not only for the benefit of the patients (6), but for the protection of the medical personnel. Our set-up, using cinematography, is not appropriate for this purpose; fluoroscopy combined with video techniques has to be used to attain a decrease in dose. It was demonstrated (7) that the conventional fluoroscopic currents of 1 to 2 mA are insufficient; in fact, 20 to 30 mA are necessary. Technical problems related to transfer rate and total number of images to a storage medium like disc or solid state memory are expected to be solved in the near future.

To avoid selective coronary catheterization. If the application of subtraction techniques could preclude selective catheterization of the coronary arteries, many risks would be avoided and an enormous amount of time could be saved. It is, however, very questionable whether this goal has to be pursued because the diagnostic price, in our opinion, is too high. Both coronary arteries are depicted simultaneously, collateral circulation cannot be appreciated very well, the most proximal parts of the coronary arteries (especially the crucially important left main stem) will nearly always be projected over the sinuses of Valsalva and after intravenous injection the passage of the latter part of the contrast material through the left atrium and left ventricle will degrade the coronary artery image quality (8). Nevertheless, one possible reason in this context to perform subtraction techniques may be the detection of bypass grafts that could not be engaged selectively. It has been demonstrated (7,9,10) that in that case supravalvular aortic injection combined with the subtraction technique can provide reliable information. The addition of the concept of apparent cardiac arrest will definitely enhance image quality.

Conclusion. Our study demonstrated that the most important benefit now offered by the subtraction technique is enhancement of conspicuousness of the larger coronary arteries and their pathologic changes and in the intensification of myocardial filling, allowing better appreciation of this phenomenon. We could achieve these results by carefully synchronizing cine pulses and heart rate and matching non-contrast and contrast frames taken at exactly comparable moments in the cardiac cycle. In our opinion, this is the right way to proceed in the promising field of coronary subtraction angiography.

We express our gratitude to Karin Visser, secretary, and Peter de Meijer, photographer.

JACC Vol. 4, No. 2
August 1984:239–44

References

1. Ziedzes des Plantes BG. Eine Röntgenographische Methode zur separaten Abbildung bestimmter Teile des Objekts. Fortschr Röntgenstr 1935;52:69–79.
2. Mistretta CA, Crumming AB, Strother CM. Digital angiography: a perspective. Radiology 1981;139:273–6.
3. Sandor T, Paulin S, Sridhar B. Densitometric evaluation of myocardial contrast accumulation. Proc Soc Photo Opt Instr Eng 1977;127:349–52.
4. Als AV, Paulin S, Serrur J, Sandor T. Evaluation of myocardial blush. In: Abstracts of the 15th International Congress of Radiology. Brussels, 1981:98.
5. Amiel M, ed. Contrast Media in Radiology. Berlin, Heidelberg, New York: Springer Verlag, 1982.
6. Levin AR, Goldberg HL, Borer JS, et al. Digital angiography in the pediatric patient with congenital heart disease: comparison with standard methods. Circulation 1983;68:374–84.
7. Goldberg HL, Moses JW, Borer JS, et al. The role of digital subtraction angiography in coronary and bypass graft arteriography (abstr). Circulation 1982;66(suppl II):II-229.
8. Turnispeed WD, Mistretta CA, Crumming AB. Arterial imaging with computerized fluoroscopy. Cardiovascular diseases. Bull Texas Heart Inst 1981;8:427–34.
9. Drury JK, Gray R, Diamond GA, et al. Computer enhanced digital angiography visualizes coronary bypass grafts without need for selective injection (abstr). Circulation 1982;66(suppl II):II-229.
10. Myerowitz PD. Computerized fluoroscopy. New technique for the noninvasive evaluation of the aorta-coronary bypass grafts and left ventricular function. J Thorac Cardiovasc Surg 1982;83:65–73.