Chemistry and Physics of Lipids 13 (1974) 389–403

CHEMICAL AND PHYSICOCHEMICAL STUDIES OF LYSYLPHOSPHATIDYLGLYCEROL DERIVATIVES. OCCURRENCE OF A2′ → 3′ LYSYL MIGRATION

J.F. TOCANNE*, H.M. VERHEIJ, J.A.F. OP DEN KAMP and L.L.M. VAN DEENEN
Laboratory of Biochemistry, State University of Utrecht, Transitorium 3, University Centre "De Uithof", Padualaan 8, Utrecht, The Netherlands,

Syntheses of 1,2-didodecanoyl-*sn*-glycero-3-phosphoryl-1′-(3′-*O*-L-lysyl)-*sn*-glycerol (IV) and 1,2-didodecanoyl-*sn*-glycero-3-phosphoryl-1′-(2′-*O*-L-lysyl)-*sn*-glycerol (VIII) as well as 1,2-didodecanoyl-*sn*-glycerol-3-phosphoryl-1′-*sn*-glycerol (XII) are described. 2′- and 3′-lysylphosphatidylglycerol are obtained as pure isomers and can be distinguished spectroscopically (infrared, 100 and 300 MHZ NMR). By these criteria a migration of the lysyl group from the 2′ to the 3′ position of the glycerol occurs in the presence of a strong acid catalyst such as HCl. On the other hand, a weak acid such as acetic acid appears ineffective in inducing lysyl migration, even at very high concentrations.

Spectroscopic analysis furthermore demonstrated that lysylphosphatidylglycerol extracted from the *Staphylococcus aureus* membrane, is a 3′-isomer.

I. Introduction

Aminoacyl derivatives of phosphatidylglycerol (PG) are known to occur in some bacterial cell membranes [1, 2]. Among these substances, the lysyl ester of PG has been identified in gram-positive bacteria: *Staphylococcus aureus, Bacillus Megaterium, Bacillus subtilis, Clostridium, welchii* and *Streptococcus faecalis* [3]. The presence of this compound in Acholeplasma has been reported as well [2]. Lysylphosphatidylglycerol (LPG) is encountered usually as a minor constituent in these bacterial membranes. However, LPG in combination with PG constitutes more than 95% of the phospholipids of *S. aureus* [3].

With respect to the chemical structure, two isomers, namely the 2′-and 3′-LPG can exist (scheme 1). Biosynthetic studies showed that only the primary hydroxyl group (*3′*) of PG was active in condensing with lysine, hence it has been deduced that in biomembranes the 3′-LPG isomer should occur mainly [4]. However, evidence for the occurence of the 2′-isomer of LPG in *S. faecalis* has been reported [5]. On the other hand, the possibility of an acid-catalyzed 2′ → 3′ lysyl migration in

* Present address: Centre de Recherche de Biochimie et de Génétique Cellulaires, 118, Route de Narbonne, 31077-Toulouse-Cedex, France

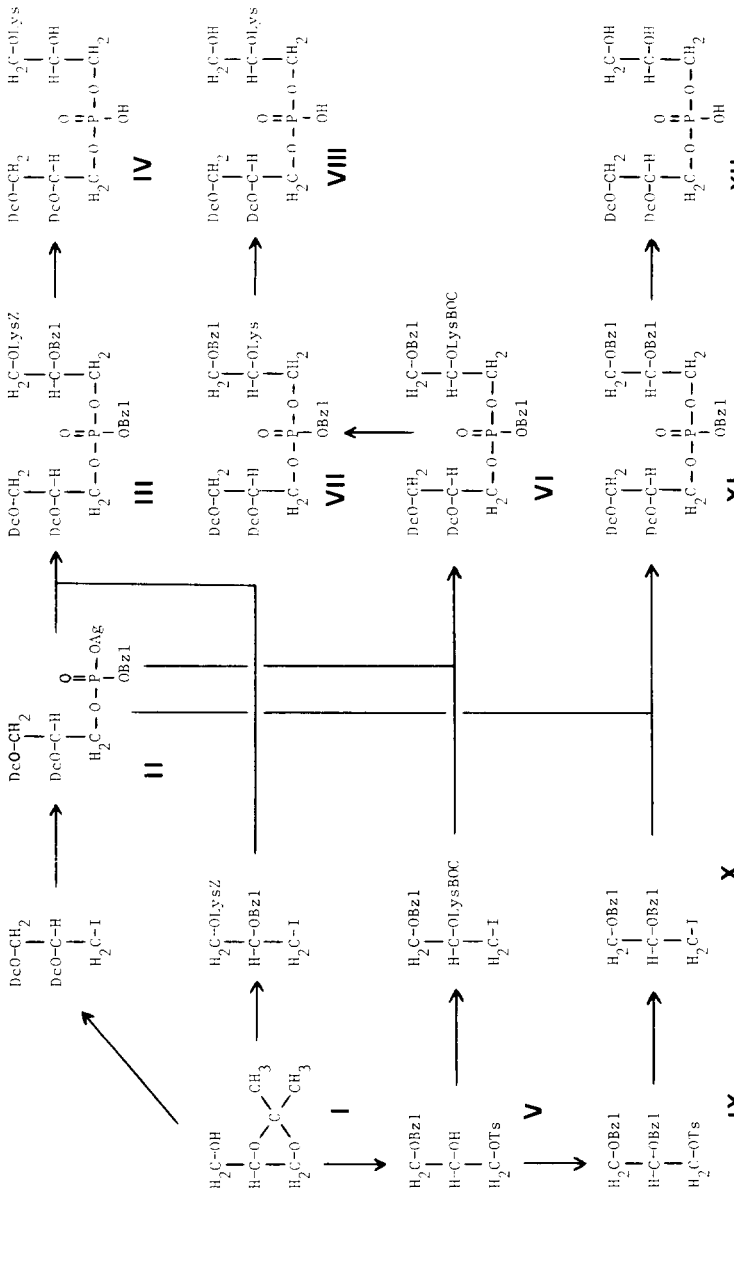

Scheme 1. Didodecanoyl-3′ and 2′-lysylphosphatidylglycerol and didodecanoyl-phosphatidylglycerol syntheses. Abbreviations used: Ts: tosylate; Dc: dodecanoyl; Bzl: benzyl; LysZ: N,N′-dibenzyloxycarbonyl-L-lysyl; LysBOC: N,N′-ditertiobutyloxycarbonyl-L-lysyl.

LPG could not be excluded [6]. For example, 1 → 2 acyl migration in glycerides is known to occur very easily [7–9]. Moreover, rapid migration of aminoacyl residues in nucleotides has been reported [10]. A chemical synthesis of 3′-LPG [11, 12] and 2′-LPG [12] has been carried out already. Naturally occurring LPG behaved chromatographically the same as the synthetic 3′-isomer and no 2′ → 3′ lysyl migration was detected under the weakly acidic conditions used [11].

In order to study the properties of the polar headgroup of PG and 3′-LPG in connection with their function in *S. aureus* membranes, it was necessary to carry out experiments with naturally occurring derivatives and with model compounds containing short chain saturated fatty acids, and a well defined polar headgroup [13]. In addition the 2′-LPG was synthesized in order to reinvestigate the fundamental question of whether a 2′ → 3′-LPG isomerization could take place.

The aim of this paper is to report on the syntheses of didodecanoyl-PG, 2′- and 3′-LPG and to show that LPG isomers can be identified spectroscopically (infrared, 100 and 300 MHZ NMR). A 2′ → 3′ lysyl migration is demonstrated to occur under certain acidic conditions. LPG extracted from *S. aureus* appears to be the 3′-isomer.

II. Results and discussion

A. Didodecanoyl-phosphatidylglycerol (C_{12}-PG) and didodecanoyl-2′-and 3′-lysyl-phosphatidylglycerols (C_{12}-2′-and 3′-LPG) syntheses

C_{12}-PG and C_{12}-LPG isomers were synthesized following the chemical pathway summarized in the scheme 1. 1,2-Isopropylidene-*sn*-glycerol I($[\alpha]_D$ = 14.5° in substance) was prepared from D-mannitol. Most of the intermediates have been described already [14–23]. Otherwise, the condensation reactions used were adapted from established procedures used for similar compounds.

With respect to C_{12}-PG, a somewhat different synthetic route, from that previously reported [19], was developed by condensing the silver salt II with dibenzyliodoglycerol X. PG was obtained by removing all benzyl protecting groups through hydrogenolysis over Pd (one step reaction). Including purification, this simple method gave PG in an overall 87% yield as calculated on the basis of derivative X.

In connection with the possible occurrence of acid-catalyzed lysyl migration during synthesis of C_{12}-2′-LPG, attempts were made to avoid acidic conditions during the last chemical step of the synthesis. It was thought that after removal of *t*-butyloxycarbonyl blocking groups from lysine, benzyl groups still protecting the phosphate and hydroxyl functions (derivative VII) could be removed by hydrogenolysis in a neutral medium. Actually it turned out from experiments carried out with pure Pd, Pd/C or Pd/BaSO_4 in neutral or in acidic conditions that only Pd/BaSO_4, in the presence of acetic acid was effective in removing these benzyl groups. Moreover, LPG derivatives are known to be chemically unstable and to break into PG and lysine in basic or even in weakly acidic medium [11] and to undergo autodegra-

dation yielding PG and lysine either in Et*O*H or in $CHCl_3$, because of the overall basicity of LPG. Thus, addition of acetic acid to the hydrogenolysis medium neutralizing the two amino groups of lysine, was necessary both to prevent the catalyst from base-poisoning and to stabilize the LPG as it was formed.

With respect to C_{12}-3′-LPG an attempt to use *t*-butyloxycarbonyl protecting groups on lysine was unsuccessfull because these protecting groups were not retained during the removal of the isopropylidene function from 1,2-isopropylidene-3-*O*-(di-t. BOC-L-lysyl)-*sn*-glycerol, even under very mild acidic conditions. The stable benzyloxycarbonyllysine (lysine-Z) derivative was used in turn. Removal of the three benzyl groups (one step reaction III → IV) was carried out over Pd/BaSO_4, in the continued presence of acetic acid.

Keeping in mind the high base-sensitivity of LPG derivatives, chromatographic procedures using silicic acid under mild acidic conditions (Ac*O*H), or using Sephadex LH 20 or Sephadex G25 in neutral medium, were developed and applied to the hydrochloric acid salt of LPG.

When purified, dihydrochloride-LPG derivatives precipitated as amorphous white powders from $CHCl_3$-acetone and when kept in the cold over P_2O_5 they appeared chemically stable for more than one year.

Small differences between R_f values of synthetic dioctadecanoyl-2′-and 3′-LPG isomers on TLC have been previously reported [12]. In fact, no reliable and significant differences could be detected between the C_{12}-2′- and 3′-LPG isomers, either on silicagel or paper chromatography using a variety of neutral and acidic eluent systems.

This behaviour and the absolute requirement of acidic conditions during the synthesis and the purification of LPG called for a study of their chemical structure by means of spectral methods and an investigation of the possibility of an acid-catalysed 2′ → 3′ lysyl migration.

B. Spectral analysis of didodecanoyl-2′- and 3′-lysylphosphatidyl-glycerol

Infrared spectra of these compounds are shown in fig. 1. These spectra are quite similar to those already reported for the C_{18}-derivatives [12]. Small but reproducible differences are observed near 850 cm^{-1} and 1000–1200 cm^{-1}. The spectrum of a 1/1 mixture (isomers were coprecipitated from $CHCl_3$-acetone) clearly is intermediate between that of each isomer.

As is seen in fig. 2, the 100 MHZ NMR spectra of these compounds in $CDCl_3$ display some qualitative differences. The 3′-LPG spectrum shows a band at $\tau = 4.2$ ppm not seen in the 2′-LPG spectrum. This band, which accounts for about two protons and which disappeared when replacing $CDCl_3$ by CD_3OD can be reasonably attributed to the hydroxylic and acidic (phosphate) protons, presumably involved in some interchelated form. With respect to 2′-LPG it seems from integration measurements that the two protons are located in the large band centered at $\tau = 5.9$ ppm. Better band resolution was observed in CD_3OD than in $CDCl_3$ but, as with infrared spectroscopy,

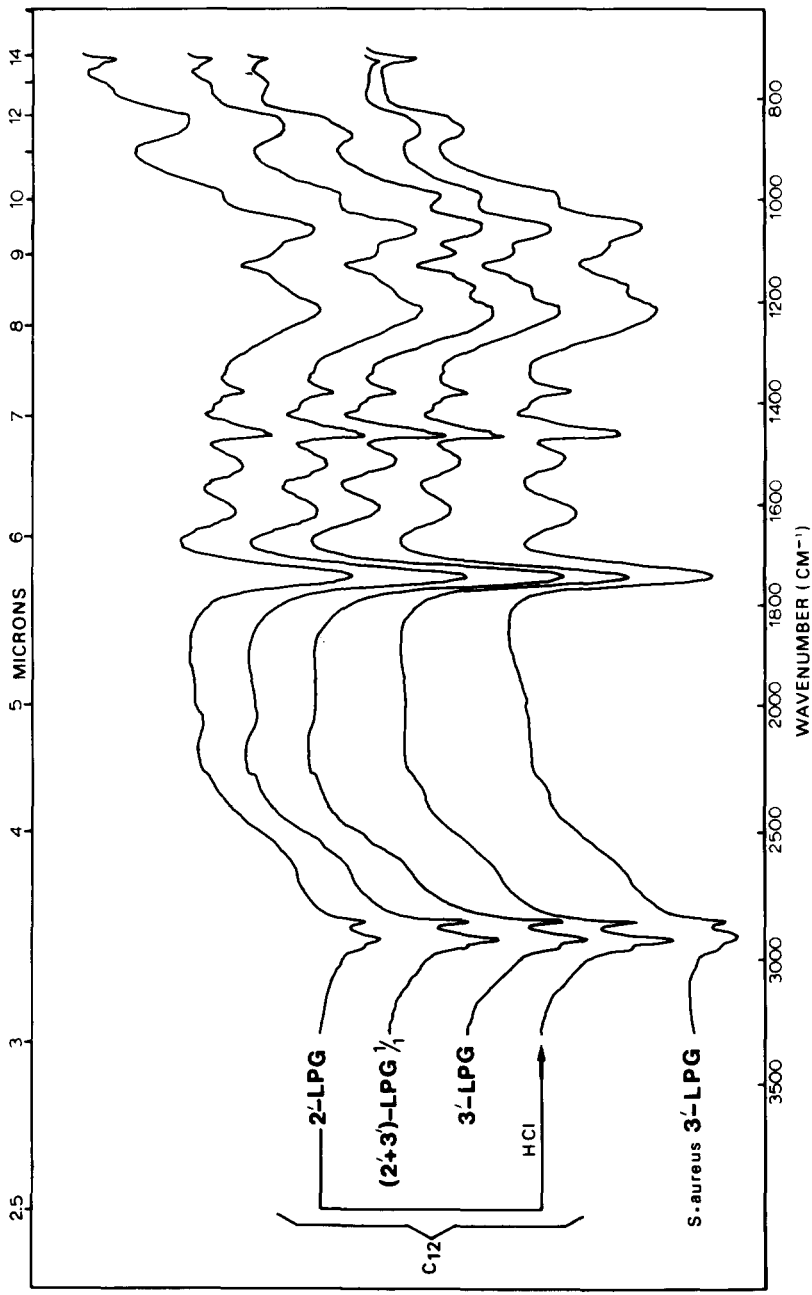

Fig. 1. Infrared spectra in KBr, of didodecanoyl-2'- and 3'-lysylphosphatidylglycerol isomers and of lysylphosphatidylglycerol extracted from *S. aureus* (converted into hydrochloric acid salts).

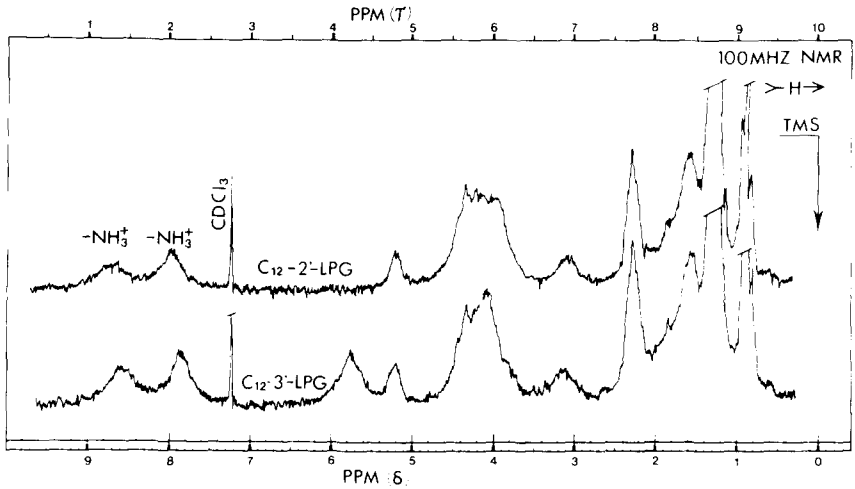

Fig. 2. 100 MHZ NMR spectra of didodecanoyl-2- and 3'-lysylphosphatidylglycerol (hydrochloric acid salts). Solvent: $CDCl_3$ + TMS as internal reference.

it must be noted that an "a priori" assignment of the correct structure to each isomer remains difficult.

In CD_3OD and at 300 MHZ the NMR spectra of these isomers now exhibit significant differences, as seen in figs. 3 and 4. Each methylene group of the lysyl residue is observed at τ = 8 ppm (β), τ = 8.47 ppm (γ), τ = 8.27 ppm (δ) and τ = 7.03 ppm (ϵ) respectively [27]. The first two alcoyl methylene groups are observed at τ = 7.66 ppm (A) and τ = 8.39 ppm (B) respectively [25, 26]. Band at τ = 4.76 ppm corresponds to the 2-methyne proton of glycerol if the gem-hydroxyl group is esterified [25, 26]. As expected from the chemical structure of each isomer, the corresponding integration curves account – with an accuracy of about 20% – for one proton (proton *2*) in the case of C_{12}-3'-LPG but for two protons (protons *2* and *2'*) with C_{12}-2'-LPG. The remaining protons born by the two glycerol residues of LPG (1, 3, 1', 3' and (2')) as well as the α-methyne proton of lysine appear together between τ = 5.5 ppm and τ = 6.1 ppm. The latter should be located near τ = 5.92 ppm as observed with lysine–methyl–ester in CD_3OD (100 MHZ NMR spectrum not shown in this article). Even at 300 MHZ, the complexe band pattern observed in this region cannot be first order analyzed. Nevertheless, as seen in fig. 4, C_{12}-2'- and 3'-LPG spectra display some differences near τ = 6 ppm. The band pattern located near τ = 5.9 ppm (3'-LPG) and τ = 6.1 ppm (2'-LPG) has to be attributed to the *1* and *3'* methylene groups which are expected near τ = 6.2–6.3 ppm or τ = 5.8–5.9 ppm if the hydroxyl group is free or esterified [25]. Taking into account that *1* and *3'* methylene proton bands overlap in LPG (as deduced in fig. 4 from the spectrum of a 2'/3'-LPG 1/1 mixture) the downfield chemical shift observed between 2'- and

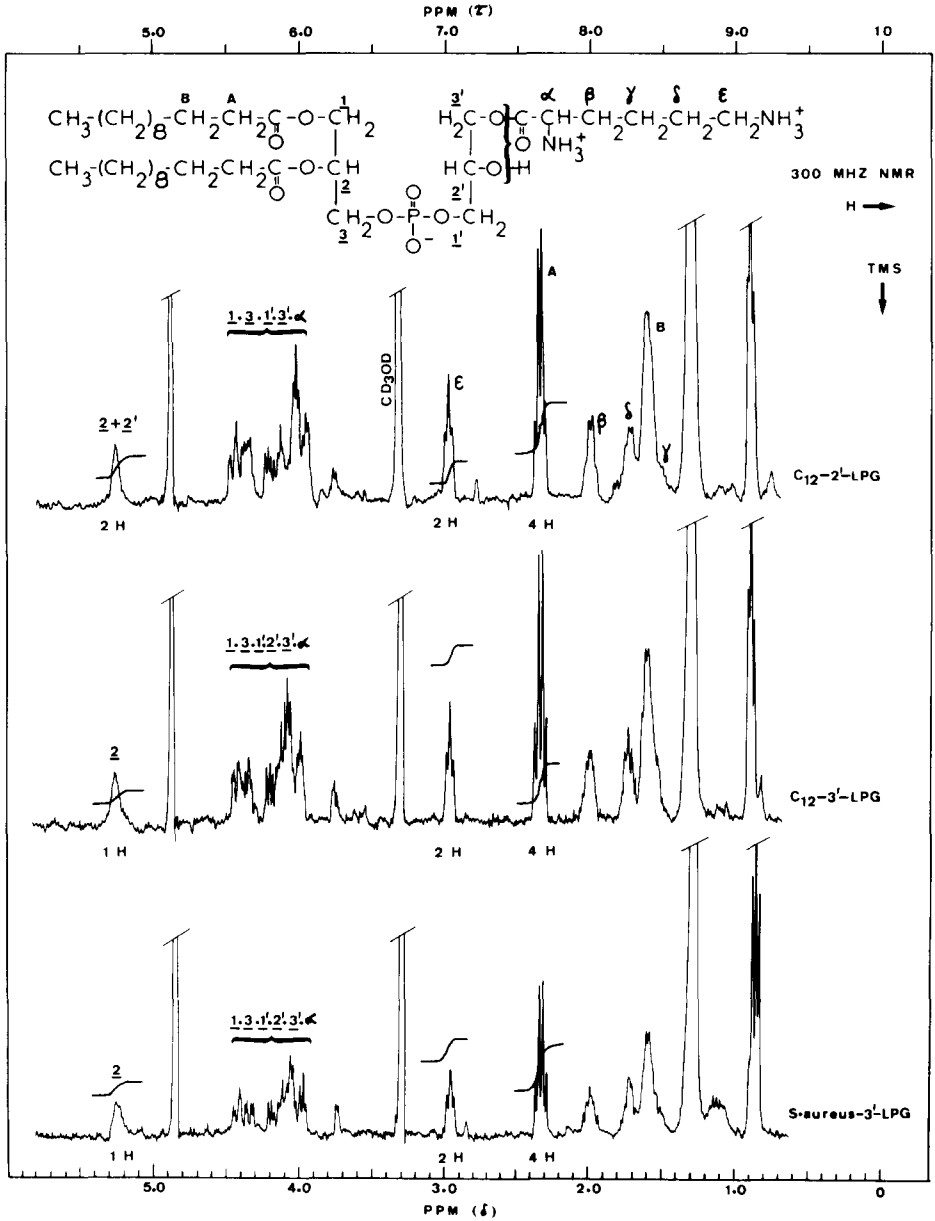

Fig. 3. 300 MHZ NMR spectra of didodecanoyl-2'- and 3'-lysylphosphatidylglycerol and lysylphosphatidylglycerol extracted from *S. aureus* (hydrochloric acid salts). Solvents: CD_3OD + TMS as internal reference.

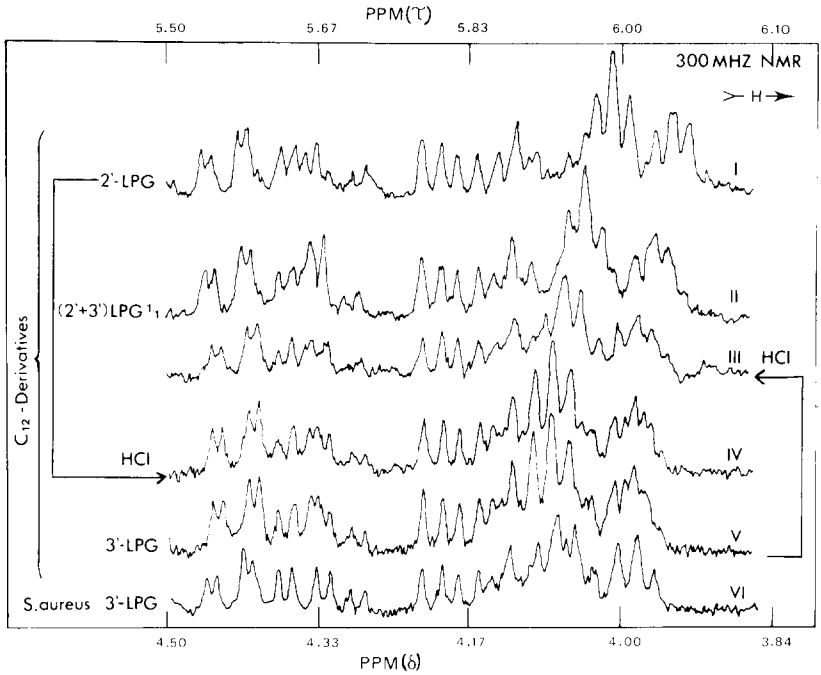

Fig. 4. Magnified 300 MHZ NMR spectra between τ = 5.50 ppm (1350 cps) and τ = 6.34 ppm (1100 cps) of didodecanoyl-2'-3'-lysylphosphatidylglycerols and lysylphosphatidylglycerol extracted from *S. aureus* (hydrochloric acid salts). Solvent CD_3OD + TMS as internal reference.

3'-LPG qualitatively accounts for the corresponding structural change. It is concluded that within the limits of detection of the NMR spectroscopic method used, the spectra shown are characteristic of pure isomers.

C. 2' → 3'-Lysylphosphatidylglycerol isomerization

Reporting on di-octadecanoyl-2'- and 3'-LPG syntheses, it was mentioned that no lysyl migration was detected under the weakly acidic conditions used (2% Ac*O*H-dioxane) [12]. The isolation of pure C_{12}-2'-LPG and C_{12}-3'-LPG from 2% Ac*O*H–Et*O*H confirms this result. To check the influence of acid concentration, isomerization experiments were carried out with increasing amounts of Ac*O*H. No change in the infrared spectrum of C_{12}-2'-LPG could be detected even using a 60-fold excess Ac*O*H over 2'-LPG. Under similar experimental conditions, C_{12}-3'-LPG was stable as well.

However, isomerization cannot be precluded when a strong acid is employed as catalyst. Using 1 mole of HCl per C_{12}-2'-LPG molecule (hydrochloric acid salt) in

Et*O*H at room temperature, a 2′ → 3′-isomerization could be observed after two days. This is clearly shown in figs. 1 and 4-IV where IR and 300 MHZ NMR spectra, respectively of HCl-treated C_{12}-2′-LPG are fully superimposable to these of C_{12}-3′-LPG. It is noted that the integration curve at $\tau = 4.76$ ppm now nearly accounts for 1 proton. As seen in the fig. 4-III, applying the same treatment to C_{12}-3′-LPG induced small modifications in its 300 MHZ NMR spectrum. Compared to C_{12}-3′-LPG and C_{12}-2′/3′-LPG 1/1 mixture spectra 4-V and 4-II, this spectrum could account for a small amount of 3′ → 2′-LPG conversion. Nevertheless, integration curve at $\tau = 4.76$ ppm still corresponded to one proton. Loss of C_{12}-2′-LPG or C_{12}-3′-LPG in the course of isomerization experiments could be precluded since the purification procedures employed (Sephadex G25 chromatography and crystallization from $CHCl_3$-acetone) were not selective against either of the isomers. The acid-catalyzed 2′ → 3′ lysyl migration in LPG is an equilibrium reaction. An accurate determination of the 3′-LPG/2′-LPG ratio at equilibrium should be of interest but it must be pointed out that this is difficult to achieve since the spectroscopic methods used in that work are not sensitive enough for this purpose.

However, 2 → 1 acyl migration in glycerides has been extensively studied [7–9]. Final equilibrium was demonstrated to be at least 90% favorable to the 1 position (primary hydroxyl group) and independent of the nature of the esterfiying residue. Still within the limits of detection of the methods used, our results which show a nearly complete 2′ → 3′-LPG conversion and a scarcely detectable 3′ → 2′ lysyl migration are in good agreement with these conclusions.

In contrast with normal fatty acids known to migrate very quickly [7, 8], α-aminoacyl migration appears to be a slow process. Under the experimental conditions, a few hours were required to detect some 2′ → 3′-LPG isomerization. No isomerization could be detected after repeated rapid 2′-LPG treatment with $HCl/CHCl_3$ reagent, which allows the use of HCl in neutralizing amino groups of LPG derivatives. In the light of the reaction mechanism already proposed which includes a protonation step of the ethero-oxygene atoms of the ester bond [8], large differences in migration rates between n-acyl and α-aminoacyl residues can easily be understood since the protonated α-amino group of lysine is strongly electron withdrawing whereas a polymethylenic chain is strongly electron repelling [28].

D. Structure of lysylphosphatidylglycerol extracted from S. aureus

A 3′-isomeric structure for naturally occurring LPG derivatives was proposed on the basis of chromatographic [12] and biological [5] tests. Actually, keeping in mind our chromatographic results with C_{12}-LPG isomers contrasting with those previously reported for C_{18}-LPG isomers [12], it turns out that differentiation between naturally occurring LPG isomers (substituted by a large variety of fatty acids) on the basis of chromatography alone is not a reliable procedure.

A spectral analysis of *S. aureus*-LPG demonstrates its 3′-structure. As seen in fig. 1, the infrared spectrum of this compound is very similar to that of C_{12}-3′-LPG,

especially in the 850–1200 cm^{-1} region which contains characteristic bands of the 3′ structure. That LPG from *S. aureus* is a 3′-isomer is clearly demonstrated in figs. 3 and 4-VI. These 300 MHZ NMR spectra (in CD_3OD) are practically superimposable on those of C_{12}-3′-LPG, with an integration curve at τ = 4.76 ppm accounting for 1 proton. In addition to the 3′-LPG characteristic bands, a small, broad band can be observed near τ = 8.9 ppm which can be assigned to the branched methyl groups of iso and ante-iso fatty acids present in *S. aureus*-LPG [3].

The presence of 2′-LPG in bacterial membranes has been suggested before [5]. Indeed 300 MHZ NMR spectroscopy applied to a crude *S. faecalis* LPG fraction indicated the presence of both 2′- and 3′-LPG. Furthermore, cultivation of *S. faecalis* in the presence of ^{14}C-lysine resulted in the labelling of two phospholipids. We were not successful, however, in isolating pure 2′-LPG from the complete lipid mixture. Therefore, the presence of a 2′-lysyl-PG in *S. faecalis* remains questionable until further experimental evidence is presented.

III. Experimental

A. General methods

Infrared spectra were recorded with a Perkin-Elmer spectrophotometer on samples dispersed in KBr. NMR spectra were recorded at 100 MHZ and 300 MHZ with Varian apparatus. TMS was used as internal reference.

B. Synthesis

The chemical pathway for the synthesis of C_{12}-PG, C_{12}-2′-LPG and C_{12}-3′-LPG is summarized in scheme 1. Each chemical step was carried out according to refs. [12, 17, 21–23]. 1,2-Isopropylidene glycerol *I* was prepared [14] from D-mannitol; syntheses of the silver dibenzylphosphate [15–17] of N,N′-dibenzyloxycarbonyl-L-lysine (Lys-Z) [18] and N,N′-ditertiobutyloxycarbonyl-L-lysine (Lys-t-BOC) [19] have been described. Each intermediate was purified either by distillation or by column chromatography. Purity was checked by TLC and chemical structure by infrared spectroscopy.

*C. 1,2-Didodecanoyl-*sn*-glycero-3-phosphoryl-1′-(3′-O-L-lysyl)-*sn*-glycerol-IV (C_{12}-3′-LPG (as di-hydrochloric acid salt)*

As a typical experiment, C_{12}-3′-LPG was obtained from the fully protected derivative III as follows: 3 g of 5% $PdO/BaSO_4$ [20] suspended in 10 ml absolute EtOH containing 2% (v/v) glacial AcOH were prereduced. After adding compound III dissolved in 2% AcOH–EtOH (10 ml), the mixture was stirred magnetically, in an atmosphere of H_2 under slight pressure and at room temperature. The reaction was

complete after 10 h, yielding C_{12}-3′-LPG more than 90% pure, contaminated only by a few per cent of PG and lyso-derivatives. After removal of the catalyst by centrifugation, the solvent was carefully evaporated in vacuo without heating. Toluene was added to the crude reaction mixture and the solution was concentrated, in vacuo, to remove acetic acid. It was then dissolved in 10 ml dry HCl–$CHCl_3$ reagent [11]. Excess HCl was immediately removed, in vacuo, in the cold (near 0°C). C_{12}-3′-LPG, as its di-hydrochloric acid salt, was purified on Sephadex LH 20 as described below and then precipitated from $CHCl_3$–acetone. The white precipitate washed with dry acetone, was dried in vacuo over P_2O_5 at −15°C. $[\alpha]_D = +6.5°$ ($c = 1.4$ $CHCl_3$).

This compound exhibited homogeneous spots as checked either by silicagel TLC or silicic acid-impregnated paper chromatography or paper chromatography using various eluent systems: $CHCl_3$–Me*O*H–Water 65/25/4 v/v; $CHCl_3$–Me*O*H–Water–Ac*O*H 65/25/4/1 v/v; di-isobutylketone–Ac*O*H–Water 40/25/5 v/v [12].

*D. 1,2-Didodecanoyl-*sn*-glycero-3-phosphoryl-1′-(2′-O-L-lysyl)-*sn*-glycerol VIII (C_{12}-2′-LPG) (as di-hydrochloric acid salt)*

C_{12}-2′-LPG was obtained from derivative *VII* and then purfied exactly as described for C_{12}-3′-LPG. Prior to hydrogenolysis, compound *VII*, product of the reaction between derivative *VI* and dry HCl in $CHCl_3$ was cleaned from HCl by filtration over a DEAE cellulose column (eluent: $CHCl_3$–Me*O*H 7/1 v/v). C_{12}-2′-LPG chromatographically behaves as C_{12}-3′-LPG. $[\alpha]_D = +7°$ ($c = 1.4$ $CHCl_3$).

*E. 1-O-Paratoluene-sulfonyl-2,3-di-O-benzyl-*sn*-glycerol IX*

Benzylation of derivative V was carried out as described elsewhere for similar substances [12]. Pure compound IX was obtained in 92% yield from the crude reaction mixture after crystallization from 95% Me*O*H. $[\alpha]_D = 1.98°$ ($c = 5.17$ methyl ethyl ketone).

*F. 1-Iodohydrin-2,3-di-O-benzyl-*sn*-glycerol X*

Following the previous procedure [12], this compound was obtained from tosylate IX as an oil in 93% yield $[\alpha]_D = +2.15°$ (in substance).

*G. 1,2-Didodecanoyl-*sn*-3-O-benzyl-phosphoryl-1′-(2′,3′-di-O-benzyl)-*sn*- glycerol XI*

Fully protected PG was obtained on condensing silver phosphate II with 10% excess of iododerivative X in boiling benzene. After removal of AgI, traces of compounds *II* were eliminated by filtration over Al_2O_3. The almost pure triester *XI* obtained in 90% yield could be used without further purification.

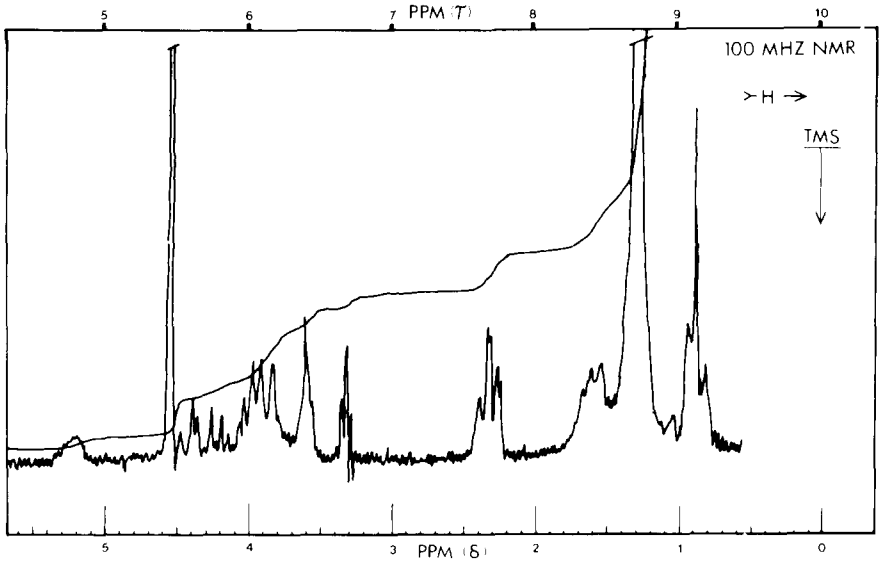

Fig. 5. 100 MHZ NMR spectrum of didodecanoyl-phosphatidylglycerol. Solvent: $CD_3OD-CDCl_3-D_2O$ 50–50–1 v/v + TMS as internal reference.

*H. 1,2-Didodecanoyl-*sn*-glycero-3-phosphoryl-1'-*sn*-glycerol XII-(C_{12}-PG) (as a sodium salt)*

Phosphotriester *XI* was hydrogenated in 96% Et*O*H in the presence of Pd [19] catalyst. After H_2 uptake ceased, the catalyst was removed and the solution was neutralized with $Ba(OH)_2$. After purification on a silicic acid column, C_{12}-PG was stored as its sodium salt, obtained by substituting Ba by Na by washing a chloroform solution of PG with a Na_2SO_4 solution. (Final yield based on X: 87%) $[\alpha]_D = +8.37°$ (c = 1.9 $CHCl_3$–Me*O*H 1/1 v/v). 100 MHZ NMR spectrum of this compound (50 mg dissolved in 0.5 ml $CDCl_3-CD_3OD-D_2O$ 50/50/1 v/v) is shown in fig. 5. Bands at τ = 4.78 ppm (methyne proton at position *2*), τ = 5.5 ppm up to τ = 6.4 ppm (methylene protons at positions *1, 3, 1', 3'* and *2'*) and τ = 7.68 ppm (methylene groups α to the carbonyle function of alcoyl chains) characteristic of the expected structure can be observed (see refs. [25–26]).

I. sn-*Phosphatidyl-1'-(3'-O-L-lysyl)-*sn*-glycerol from* Staphylococcus aureus (S. aureus-*3'-LPG) (as di-hydrochloric acid salt)*

S. aureus-3'-LPG was extracted from *S. aureus* membrane and prepurified as described elsewhere [3]. Purification was achieved by means of the silicic acid and

Sephadex G25 procedures described below. *S. aureus*-3′-LPG-di-hydrochloride derivative, crystallized as a white powder from $CHCl_3$-acetone and dried in vacuo over P_2O_5, gave homogeneous spot with chromatographic techniques described above for C_{12}-3′-LPG. R_f values were identical to those of C_{12}-2′-LPG.

J. Isomerization experiments

As a typical procedure, a given amount of titrated dry HCl–$CHCl_3$ reagent was added to C_{12}-2′-LPG (di-hydrochloride derivative) dissolved in absolute Et*O*H (about 5 mg/ml) as to obtain 1 extra HCl per LPG molecule. When experiments were performed with glacial acetic acid, the acid was directly added to the ethanol solution. After reaction at room temperature for the desired time, solvents and HCl (or Ac*O*H) were removed in vacuo without heating. When necessary, the residue was freed from lyso-derivatives which can be formed after a long reaction time, by using the Sephadex G25 procedure. The pure sample (di-hydrochloric acid salt) was then precipitated from $CHCl_3$–acetone and dried in vacuo over P_2O_5.

K. General purification procedures of lysylphosphatidylglycerol derivatives by column chromatography

1. Silicic acid

Prior to be used, silicic acid (purchased from Merck) was treated with HCl 4 N, washed with distillated water until free of chloride and then dried over night at 110°C. LPG samples were applied (as di-hydrochloride derivatives) on columns prepared in $CHCl_3$ + 0.2% glacial Ac*O*H and then eluted with increasing amounts of Me*O*H + 0.2% Ac*O*H. Each eluting fraction was evaporated in vacuo without heating and immediately treated with dry HCl–$CHCl_3$ as described above for C_{12}-3′-LPG.

2. Sephadex LH20

As a standard procedure, di-hydrochloride-C_{12}-LPG derivative (400 mg) was applied on a Sephadex LH 20 column (4.5 × 150 cm) packed in $CHCl_3$–MeOH 1/1 v/v. Using a flow rate of 30 ml/hr didodecanoyl-LPG were eluted with about 600 ml of the same solvent system. After addition of a drop of glacial Ac*O*H, each fraction was evaporated in vacuo without heating and immediately treated with dry HCl–$CHCl_3$.

3. Sephadex G25 (coarse)

As a typical example, 2′- or 3′-LPG (di-hydrochloride derivatives) samples (200 mg) were introduced on G25 Sephadex column (50 ml) packed in $CHCl_3$–Me*O*H 95/5 v/v saturated with water and rapidly eluted with the same solvent system (70 ml). The column was packed in advance in Me*O*H–water 1/1 v/v as described elsewhere [24]. After adding 2 drops Ac*O*H, the whole fraction was eva-

porated in vacuo without heating, redissolved twice in dry $CHCl_3$ in order to remove remaining traces of water and then treated with dry $HCl-CHCl_3$ as already described.

Acknowledgements

One of the authors, J.F.T., is grateful to the NATO for a post-doctoral fellowship over the period 1971–1972 and to the EMBO for a grant over the period 1972–1973. We are grateful to Dr. M.J.A. de Bie and to Dr. J.W. Marsman (Organic Chemistry Laboratory and TNO of Utrecht) for helpful discussions and realization of 100 MHZ NMR spectra. We gratefully acknowledge the contribution of Dr. J. Gelan and Professor M. Anteunis of the Laboratory of NMR spectroscopy and Organic Chemistry of the State University of Gent, Belgium, in carrying out the 300 MHZ NMR spectroscopy.

References

[1] S.J. Wakil, Lipid metabolism, Academic Press, London (1970) ch. V
[2] J.A.F. Op den Kamp, L.L.M. van Deenen and V. Tomasi, in: Structural and functional aspects of lipoproteins in living systems, ed. by E. Tria and A.M. Scanu, Academic Press, London (1969) ch. B4
[3] C.W.M. Haest, J. de Gier, J.A.F. Op den Kamp, P. Bartels and L.L.M. van Deenen, Biochim. Biophys. Acta 255 (1972) 720
[4] W.J. Lennarz, P.P.M. Bonsen, and L.L.M. van Deenen, Biochemistry 6 (1967) 2307
[5] J.M. dos Santos Mota, J.A.F. Op den Kamp, H.M. Verheij and L.L.M. van Deenen, J. Bacteriol. 104 (1970) 611
[6] P.P.M. Bonsen, Thesis, Utrecht (1967)
[7] J.B. Martin, J. Am. Chem. Soc. 75 (1953) 5483
[8] O.E. van Lohuizen and P.E. Verkade, Rec. Trav. Chim. 79 (1960) 133
[9] W.Th.M. de Groot, Lipids 7 (1972) 626
[10] D.H. Rammler and H.G. Khorana, J. Am. Chem. Soc., 85 (1963) 1997.
[11] P.P.M. Bonsen, G.H. de Haas and L.L.M. van Deenen, Biochemistry 6 (1967) 1114
[12] J.G. Molotkovsky and L.D. Bergelson, Chem. Phys. Lipids 2 (1968) 1
[13] J.F. Tocanne, P.H.J.Th. Ververgaert, A.J. Verkleij and L.L.M. van Deenen, Chem. Phys. Lipids 12 (1974) 201
[14] J. Lecocaq and C.E. Ballou, Biochemistry 3 (1964) 976
[15] F.R. Atherton, H.T. Openshaw and A.R. Todd, J. Chem. Soc. (1945) 382
[16] F.R. Atherton, H.T. Howard and A.R. Todd, J. Chem. Soc. (1948) 1106
[17] L.W. Hessel, I.D. Morton, A.R. Todd and P.E. Verkade, Rec. Trav. Chim. 73 (1954) 150
[18] R.A. Boissonas, S. Guttman, R.L. Huguenin, P.A. Jaquenoud and Ed. Sandrin, Helv. Chim. Acta 41 (1958) 1867
[19] A.J. Slotboom and P.P.M. Bonsen, Chem Phys. Lipids 5 (1970) 328
[20] R. Kuhn and H.J. Haas, Angew. Chemie 67 (1955) 785
[21] E. Baer and H.O.L. Fischer, J. Am. Chem. Soc. 70 (1948) 609
[22] E. Baer and S.K. Pavanaran, J. Biol. Chem. 236 (1961) 2410

[23] J. Howe and T. Malkin, J. Chem. Soc. (1951) 2663
[24] G. Rouser, G. Kritchesky and A. Yamamoto, in: Lipid Chromatographic Analysis, vol. 1, ed. by G.V. Marinetti. Marcel Dekker, New York (1967) 113
[25] D. Chapman and A. Morrison, J. Biol. Chem. 241 (1966) 5044
[26] R. Haque, I.J. Tinsley and D. Schmelding, J. Biol. Chem. 247 (1972) 157
[27] J. Gelan and M. Anteunis, personal communication
[28] G. Chuchani, in: The Chemistry of the Amino Group, ed. by S. Patai, Interscience (1968) 209