TOXICOLOGY AND APPLIED PHARMACOLOGY **111**, 514–522 (1991)

Putative Neurotrophic Factors in the Protection of Cisplatin-Induced Peripheral Neuropathy in Rats

FRANK P. T. HAMERS,* ROLAND GERRITSEN VAN DER HOOP,* PETER A. STEERENBURG,† JEAN P. NEIJT,‡ AND WILLEM HENDRIK GISPEN*,[1]

*Department of Pharmacology, Rudolf Magnus Institute, State University Utrecht, Vondellaan 6, 3521 GD Utrecht, The Netherlands; †Department of Pathology, RIVM, Bilthoven, The Netherlands; and ‡Department of Oncology, Academic Hospital Utrecht, Utrecht, The Netherlands

Received March 8, 1991; accepted July 9, 1991

Putative Neurotrophic Factors in the Protection of Cisplatin-Induced Peripheral Neuropathy in Rats. HAMERS, F. P. T., GERRITSEN VAN DER HOOP, R., STEERENBURG, P. A., NEIJT, J. P., AND GISPEN, W. H. (1991). *Toxicol. Appl. Pharmacol.* **111**, 514–522. One of the major side effects of cisplatin is its neurotoxicity. In rats, this neurotoxicity can be measured as a slowing of the H-reflex-related sensory nerve conduction velocity. In this study the ability of the neurotrophic peptide ORG 2766 (an $ACTH_{4-9}$ analog) to prevent this neurotoxic side effect was investigated in rats subjected to a high-dose cisplatin regime (2 mg/kg, 2/wk). Furthermore, the efficacy of nimodipine (a calcium entry blocker of the 1,4-dihydropyridine type with presumed neurotrophic or neuroprotective activity) to prevent the neuropathy induced by both a low (1 mg/kg, 2/wk) and a high (2 mg/kg, 2/wk) dose cisplatin regime was studied. In cisplatin-treated rats concurrently treated with vehicle (saline for ORG 2766, polyethylene glycol for nimodipine) a significant slowing of the H-related sensory nerve conduction velocity was observed whereas in rats treated with both cisplatin and ORG 2766 or nimodipine, no decrease of this conduction velocity occurred. The possibility that nimodipine hampers the antitumor activity of cisplatin was investigated in an immunocytoma model in the LOU/M rat. Similar tumor regression was observed in cisplatin-treated rats concurrently treated with nimodipine or vehicle. These data suggest that both ORG 2766 and nimodipine protect from the induction of a cisplatin-induced neuropathy, at least in this animal model, and thus warrant investigation of their neuroprotective efficacy in humans subjected to a cisplatin-based chemotherapy.

Cisplatin (*cis*-diaminedichloroplatinum (II)) is widely used as an anticancer agent. Its major side effects are of gastrointestinal, hematologic, nephrologic, and neurologic origin. The nephrotoxicity can be effectively overcome by a regimen of hydration and forced diuresis. With this side effect partly eliminated, the neurotoxicity becomes the dose-limiting factor, especially in high-dose treatment regimens. The cisplatin-induced neuropathy is of a primary sensory nature in which an early deterioration of the thickest myelinated fibers leads to an early decrease in vibratory sensibility in toes, diminished proprioception, and loss of ankle jerks. The sensitivity to pain and temperature are relatively spared (Elderson *et al.*, 1989; Thompson *et al.*, 1984; Walsh *et al.*, 1982). Neurophysiological studies show decreased sensory but normal motor nerve conduction velocities with occasional signs of denervation (Reinstein *et al.*, 1980; Thompson *et al.*, 1984). One method to improve the therapeutic index of cisplatin would be to counteract cisplatin neurotoxicity by the concomitant administration of neuroprotective drugs. Neurotrophic factors that enhance neuronal

[1] To whom correspondence should be addressed.

0041-008X/91 $3.00

development, maturation, and repair are of interest in this respect. In order to test the efficacy of putative neuroprotective drugs, a rat model of cisplatin-induced neuropathy has been developed in our laboratory (De Koning *et al.*, 1987a). Recently we were able to demonstrate that ORG 2766, a synthetic degradation-resistant $ACTH_{4-9}$ analog that was previously shown to enhance postlesion repair in the PNS (Strand *et al.*, 1989, Bär *et al.*, 1990), may prevent the cisplatin-induced slowing of the H-reflex-related sensory nerve conduction velocity in the rat (De Koning *et al.*, 1988; Gerritsen van der Hoop *et al.*, 1988a,b, 1989). In a subsequent randomized double-blind, placebo-controlled study with 55 ovarian cancer patients, ORG 2766 treatment prevented the increase in vibration perception threshold and counteracted signs and symptoms of neurotoxicity (Gerritsen van der Hoop *et al.*, 1990).

In the past decade nimodipine, a calcium entry blocker of the dihydropyridine type was shown to possess neurotrophic and neuroprotective properties (Traber and Gispen, 1989). Oral administration of nimodipine ameliorated central and peripheral nervous system dysfunction in aged rats (Schuurman *et al.*, 1987; Gispen *et al.*, 1988; Schuurman and Traber, 1989) and improved functional recovery following sciatic nerve crush in young-adult rats (Van der Zee *et al.*, 1987). In view of the trend toward the use of higher dose regimens in testicular and ovarian cancer it was reasonable to study the effects of neuroprotective drugs in an experimental neuropathy induced by high doses of the oncolytic compound administered over a short time period. In the present paper we report on the neuroprotective effect of the peptide ORG 2766 and the calcium entry blocker nimodipine under conditions of severe cisplatin intoxication in rats.

MATERIALS AND METHODS

Animals

In the experiments on the protection from cisplatin neurotoxicity female Wistar rats of an inbred strain (originally obtained from TNO, Zeist, The Netherlands) were used. Their weights at the onset of the experiments were approximately 190–220 g (age 12–13 weeks). In the experiment on the antitumor activity of cisplatin in the presence of nimodipine, female LOU/M rats of an inbred strain (RIVM, Bilthoven, The Netherlands), aged 8–10 weeks at the onset of the experiment, were used. The rats were housed in groups of four per Makrolon cage on sawdust and had free access to rat chow and water. They were maintained on a 12-hr dark–light cycle with lights on beginning at 7:30 AM.

Electrophysiology

The electrophysiological examinations for determination of the nerve conduction velocity were carried out under general anesthesia (Hypnorm, Janssen Pharmaceutica BV, Tilburg, The Netherlands; containing 10 mg/ml fluanison and 0.315 mg/ml fentanylcitrate, dose 0.7 ml/kg body wt, administered subcutaneously). The method is described in detail by De Koning and Gispen (1987b). In short, the sciatic and tibial nerves are stimulated at the sciatic notch and the ankle, respectively, by means of monopolar needle electrodes. The anode is placed 5 mm proximal to the cathode. Upon stimulation of these mixed peripheral nerves, two responses can be recorded from the small muscles of the foot by means of surface electrodes: the short-latency M-response due to stimulation of α-motor fibers and the long-latency H-response due to stimulation of the afferent I^A-fibers, which monosynaptically excite α-motoneurons in the spinal cord. From the latencies of the H-response at both stimulation points and the distance between the two stimulation points (as measured between sciatic notch and calcaneus in the gently stretched paw), the H-reflex-related sensory nerve conduction velocity (H-SNCV) can be calculated (Stanley, 1981; De Koning *et al.*, 1987a). A schematic representation of the method, as well as examples of traces obtained from the foot muscles upon electrical stimulation of the nerve, is drawn in Fig. 1.

Measurements were performed the day prior to the first cisplatin injection and at different time-points during the experiment as indicated in the experimental design.

Drugs

ORG 2766 (H–Met (O_2)–Glu–His–Phe–D–Lys–Phe–OH a gift from Organon Int. B.V., Oss, The Netherlands) was dissolved in saline and administered sc. Nimodipine (a gift from Tropon Werke A.G., Köln, Germany) was dissolved in a mixture of polyethylene glycol (PEG) and demineralized water (PEG:water, 2:1) and administered ip. Cisplatin (Platinol, Bristol-Myers, Spain; 0.5 mg cisplatin/ml) solution was diluted with saline and adminis-

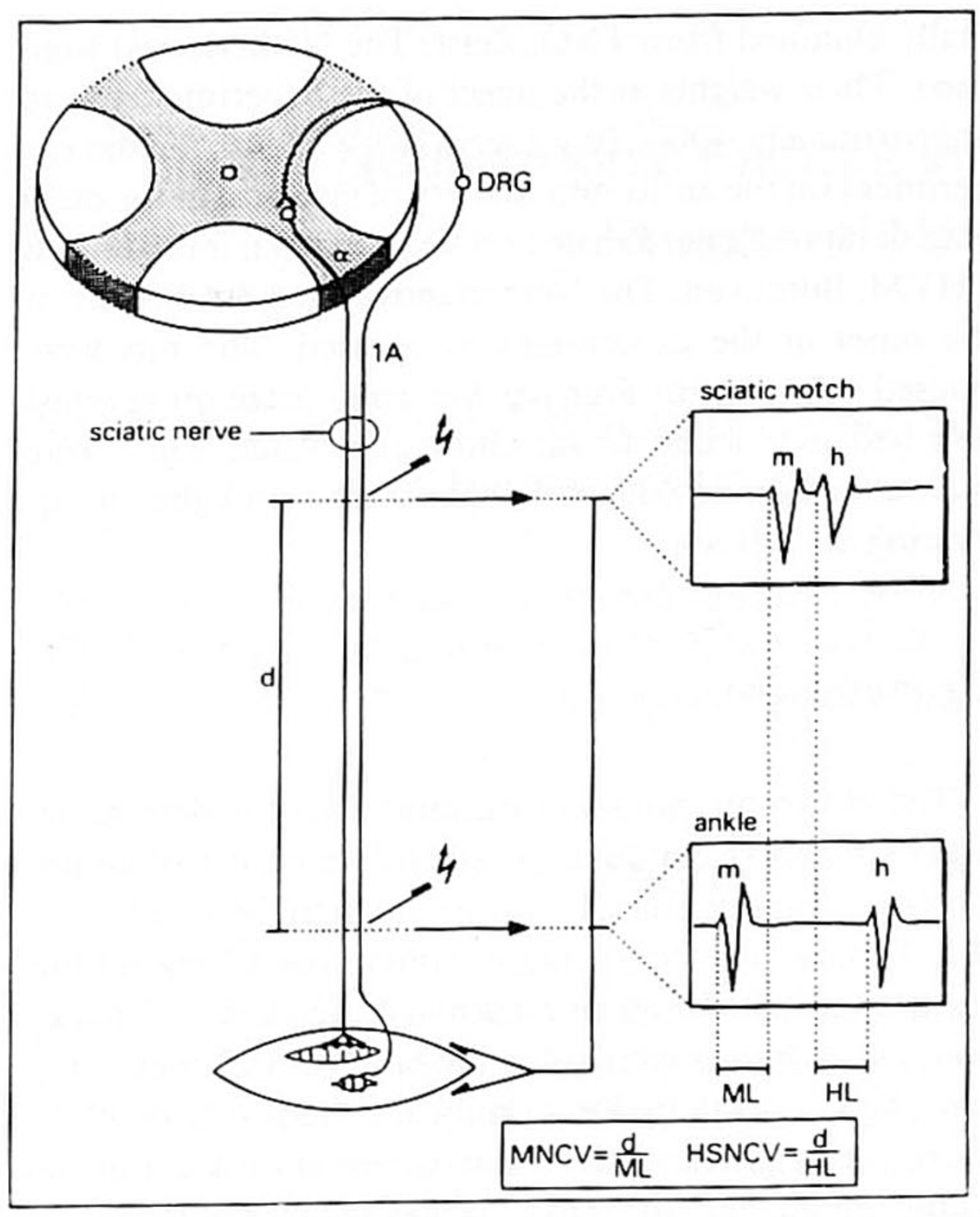

FIG. 1. Schematic illustration of the electrophysiological test model. Proprioceptive I^A-fibers, originating at muscle spindles, reach the spinal cord via the dorsal root and have monosynaptically contacted α-motoneurons innervating the same muscle (stretch reflex arc). Stimulation of the nerve leads to both a direct or M-response in the small foot muscles by direct excitation of the motor-fibers (short latency) and an indirect or H-response by indirect excitation of the motor-fibers via the reflex arc (longer latency). Representative drawings of traces that can be recorded from the small foot muscles after stimulation at both the hip (sciatic notch) and the ankle are shown. From the differences in latency of the responses after stimulation of the nerve at different points both the maximal motor and the sensory nerve conduction velocities can be estimated.

tered ip. Dosing regimes are specified in the Experimental Design section.

Experimental Design

First experiment. In this experiment two groups of 12 rats each were subjected to biweekly cisplatin injections of 1 mg/kg body wt ip (final cisplatin concentration, 0.04 mg/ml) for 10 weeks (cumulative cisplatin dose, 20 mg/kg). Another group of 12 animals, injected at the same time with a similar volume of saline, served as an age-matched control group. The cisplatin-treated groups were fed either nimodipine containing or control food pellets. The control group was fed normal rat chow. The nimodipine content of the prepared food pellets was 800 ppm; as the animals eat 10–15 g/day the daily dose ingested was thus about 8–12 mg (32–48 mg/kg).

Electrophysiological measurements were performed at cumulative doses of 0, 14, 17, and 20 mg cisplatin/kg body wt.

Second experiment. In this experiment two groups of respectively 15 and 14 rats were treated with cisplatin 3 mg/kg ip (final cisplatin concentration, 0.15 mg/ml) biweekly for the first week followed by cisplatin 2 mg/kg ip (final cisplatin concentration, 0.10 mg/ml) biweekly for 4 more weeks (cumulative cisplatin dose, 22 mg/kg). Another two groups of 9 rats each, injected with saline instead of cisplatin, served as age controls.

The cisplatin-treated groups and the saline-treated groups were cotreated with either nimodipine 20 mg/kg or vehicle, injected ip every 48 hr. The first nimodipine injection was administered the day before cisplatin treatment started (40 mg nimodipine/ml vehicle). As nimodipine is sensitive to light, it was protected from direct illumination until injection.

Electrophysiological examination was carried out at cumulative doses of respectively 0, 12, 18, and 22 mg cisplatin/kg body wt in a blind manner.

Third experiment. In this experiment two groups of 12 animals each were injected with cisplatin 2 mg/kg body wt ip (final cisplatin concentration, 0.08 mg/ml), biweekly for 5 weeks (cumulative cisplatin dose, 20 mg/kg). As in experiment 1, another group of 12 rats served as an age control group. The cisplatin-treated groups were cotreated with either 10 μg ORG 2766 dissolved in 0.5 ml of saline or saline sc three times a week (on Monday, Wednesday, and Friday) from the first cisplatin injection onward; the age controls were treated with saline in the same frequency.

Electrophysiology was performed at cumulative doses of 0, 12, and 20 mg cisplatin/kg body wt.

Tumor model. IgM-immunocytoma cells were originally obtained from a LOU/C inbred rat strain in which a high incidence of immunocytomas that secrete a variety of monoclonal immunoglobulins occurs. The histocompatible LOU/M rat is used as a recipient for the IgM-immunocytomas, because the LOU/C rats are difficult to breed. In the experimental animals 1×10^5 IgM-immunocytoma cells in 0.5 ml of plain Roswell Park Memorial Institute Medium 1640 (Grand Island Biological Co., Europe B.V., Hoofddorp, NL) were inoculated subcutaneously on the flank. The growth of the tumor is measured twice a week (on Tuesday and Friday, once cisplatin therapy has started prior to a new administration of cisplatin) with vernier callipers and expressed as mean value of three perpendicular measurements. At an average tumor size of 1–1.5 cm, cisplatin therapy is started (De Jong *et al.*, 1983).

At the completion of both the intoxication and the immunocytoma inoculation experiments, the animals were euthanized by decapitation.

Data Analysis

Data points from animals that died during the course of the experiment were excluded from statistical analysis. The data were analyzed by an analysis of variance for multiple measurements (ANOVAR) followed by supplemental t tests.

RESULTS

Cisplatin Intoxication and Survival

Age-matched controls showed a normal increase in body weight, whereas body weight of cisplatin-treated rats (independent of the treatment schedule) after an initial increase gradually declined to approximately 80–90% of the pretreatment value. Treatment with ORG 2766 or nimodipine did not influence body weight. All intoxicated rats in the two experiments, employing 1 or 2 mg/kg body wt of cisplatin per injection, survived. In the second experiment, using 3 mg/kg body wt per cisplatin injection, seven rats died after the first two cisplatin injections. Therefore in the subsequent week the treatment schedule was modified. The next cisplatin injection was omitted and from the next injection onward a dose of 2 mg/kg body wt was employed. Nevertheless in the course of this experiment in both cisplatin-treated groups one more rat died before the measurement at 18 mg cisplatin/kg body wt. In the last treatment week eight more cisplatin-treated rats died. Data obtained from rats that died during the experimental period were omitted from the data analysis.

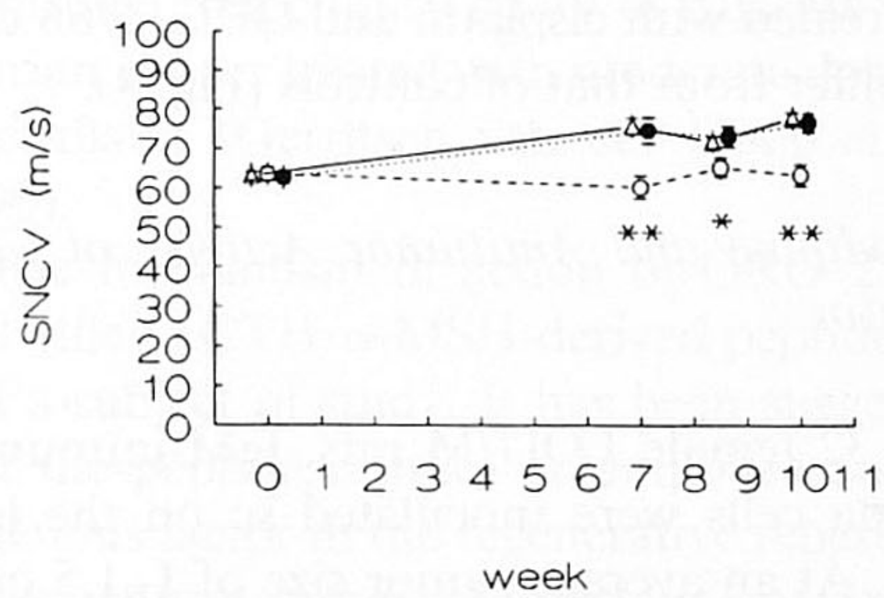

FIG. 2. The sciatic SNCV of rats intoxicated with cisplatin 1 mg/kg body wt twice a week and treated with oral nimodipine (experiment 1). On the vertical axis is depicted the SNCV in m/sec. For the sake of clarity overlapping values are plotted around the exact time point at which the measurement was performed. Indications of significance (two-sided t test) for differences between the age control group and the cisplatin/vehicle group are provided (*$p < 0.05$; **$p < 0.001$). Values are expressed as means ± SEM. (○) Animals treated with cisplatin, receiving normal food (n = 12); (●) animals treated with cisplatin, receiving nimodipine containing food (n = 12); (△) age-matched controls (n = 12).

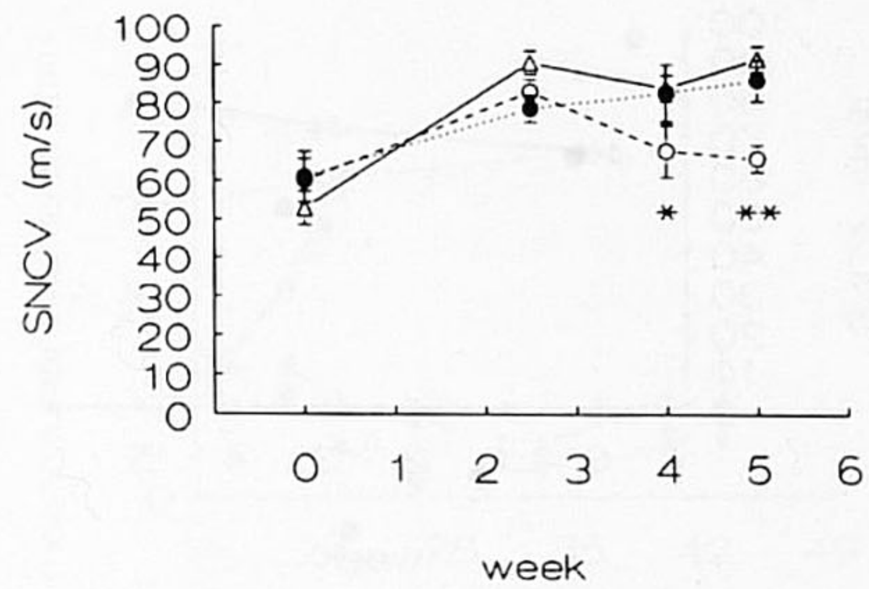

FIG. 3. Alterations in the sciatic SNCV during high-dose cisplatin intoxication treated with ip nimodipine 20 mg/kg body wt every 48 hr (experiment 2). On the vertical axis is depicted the SNCV in m/sec. As there were no significant differences in H-SNCV between the nimodipine- and the vehicle-treated age control groups, these groups were combined in one age control group. Indications of significance (two-sided t test) for differences between the age control group and the cisplatin/vehicle group are provided (*$p < 0.05$; **$p < 0.01$). Values are expressed as means ± SEM. (○) Animals concurrently treated with cisplatin and vehicle (n = 7); (●) animals concurrently treated with cisplatin and nimodipine (n = 7); (△) age-matched controls (n = 18).

Effect of Cisplatin on H-Related Sensory Nerve Conduction Velocity

In all three experiments rats treated with cisplatin and vehicle developed a severe sensory neuropathy as demonstrated by a significant decrease in the H-SNCV at cumulative doses of respectively 14 (experiment 1), 18 (experiment 2), and 12 (experiment 3) mg/kg body wt (Figs. 2, 3, and 4). At the end of the experimental period the H-SNCV in cisplatin-

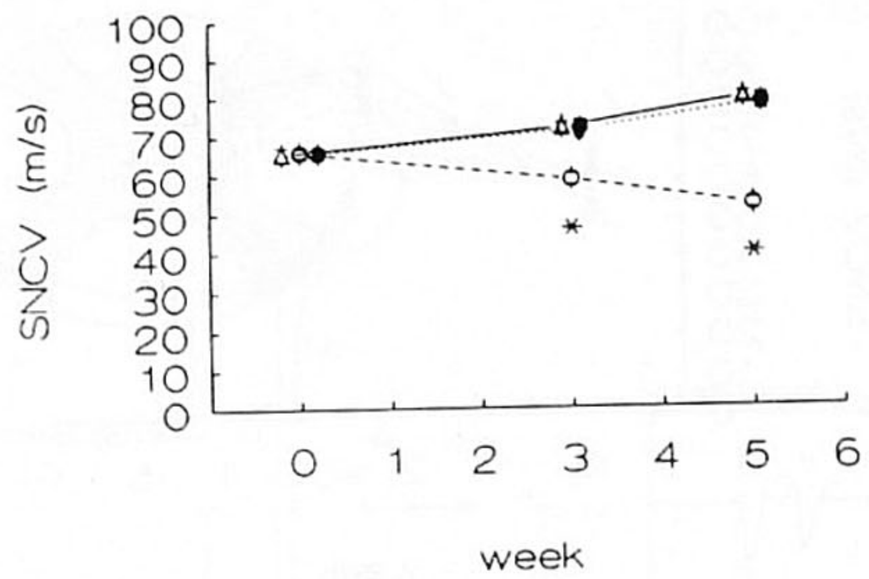

FIG. 4. Effect of ORG 2766 on the sciatic SNCV of rats intoxicated with cisplatin 2 mg/kg body wt twice a week (experiment 3). On the vertical axis is depicted the SNCV in m/sec. For the sake of clarity overlapping values are plotted around the exact time point at which the measurement was performed. Indications of significance (two-sided t test) for differences between the age control group and the cisplatin/saline group are provided (*, $p < 0.001$). Values are expressed as means ± SEM. (○) Animals concurrently treated with saline and cisplatin ($n = 12$); (●) animals concurrently treated with ORG 2766 and cisplatin ($n = 12$); (△) age-matched controls ($n = 12$).

treated animals was 15–30% lower than in control animals. In nonintoxicated rats treatment with ORG 2766 (De Koning and Gispen, 1987b) or nimodipine alone did not affect the H-SNCV.

Oral Nimodipine and Cisplatin Neuropathy

The low-dose (1 mg/kg twice a week) cisplatin treatment induced a decrease in H-SNCV which could be effectively counteracted by feeding the animals nimodipine containing food pellets (ANOVAR; $F_{1,22} = 19.15$, $p < 0.001$; t test at a cumulative cisplatin dose of 20 mg/kg: $t = 3.63$, df 22, $p < 0.01$). The H-SNCV of these nimodipine fed animals did not differ from that of controls (Fig. 2).

Intraperitoneal Nimodipine and Cisplatin Neuropathy

Employing a high-dose cisplatin regime (3 mg/kg twice a week in the first week, see Experimental Design) an initial increase in H-SNCV followed by a subsequent decrease was observed in those rats treated with cisplatin/vehicle from 18 mg/kg onward.

Rats concurrently treated with cisplatin and nimodipine administered intraperitoneally exhibited a significantly higher H-SNCV at cumulative doses of cisplatin at 18 and 22 mg cisplatin/kg body wt (ANOVAR: $F_{1,12} = 6.55$, $p < 0.025$; t test at a cumulative cisplatin dose of 22 mg/kg: $t = 3.16$, df 12, $p < 0.01$) than rats receiving only cisplatin and the vehicle (Fig. 3). In fact, the nimodipine-treated group did not significantly differ from the age-matched controls.

ORG 2766 and Cisplatin Neuropathy

In this experiment cisplatin (2 mg/kg twice a week) administration induced a sensory neuropathy as evidenced by a decrease in H-SNCV in those animals treated with cisplatin and placebo, whereas the H-SNCV of rats concurrently treated with cisplatin and ORG 2766 remained significantly higher (ANOVAR: $F_{1,22} = 104$, $p < 0.001$; t test: $t = 10.4$, df 22, $p < 0.001$). Moreover, the H-SNCV of rats treated with cisplatin and ORG 2766 did not differ from that of controls (Fig. 4).

Nimodipine and Antitumor Activity of Cisplatin

In 32 female LOU/M rats, IgM-immunocytoma cells were inoculated sc on the left flank. At an average tumor size of 1–1.5 cm, cisplatin treatment was started in 16 rats while 16 rats received no cisplatin treatment. Both from the cisplatin-treated group and from the control group 10 animals also received injections with nimodipine (20 mg/kg body wt every 48 hr). From either group the other 6 animals received only injections with the vehicle (PEG). The tumor reduction was assessed twice a week as described above. In the control groups (no cisplatin) the tumor continued to grow, whereas in the cisplatin-treated groups

there was an almost complete tumor regression in most animals. There were no significant effects of nimodipine on tumor growth or reduction as compared with vehicle (Fig. 5).

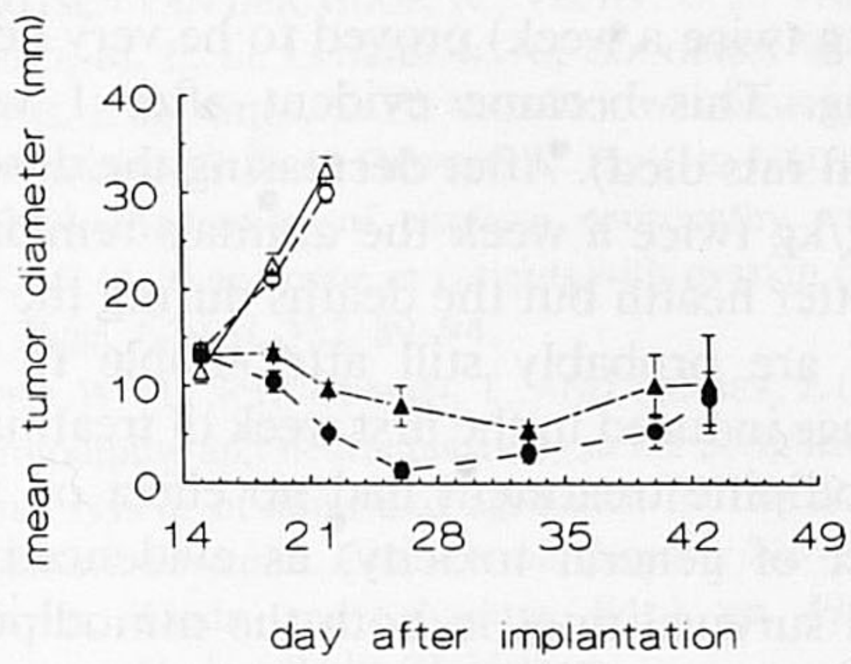

FIG. 5. The reduction of tumor size in non-cisplatin-treated animals concurrently treated with nimodipine (○, $n = 10$) or PEG (△, $n = 6$) and cisplatin-treated animals cotreated with nimodipine (●, $n = 10$) or vehicle (▲, $n = 6$). Cisplatin was injected ip twice a week in a dose of 1 mg/kg body wt, nimodipine/PEG was injected every 48 hr ip, starting at the day of the first cisplatin injection. Values are expressed as means ± SEM.

DISCUSSION

In this study we demonstrate protective effects of the neurotrophic peptide ORG 2766 and the calcium entry blocker nimodipine on cisplatin-induced neuropathy in rats. The beneficial effect of ORG 2766 on cisplatin-induced neuropathy has been reported previously (De Koning *et al.*, 1987a, 1988; Gerritsen van der Hoop *et al.*, 1988a,b). Here we show that the peptide is also effective in animals subjected to higher dosages of cisplatin. It is thought that cancer of the ovary (and testis) may be more successfully treated with high-dose cisplatin regimens (Ozols, 1989). The present observation that ORG 2766 prevents cisplatin-induced neuropathy even in high-dose treatment regimens in rats may have important clinical consequences. The neuroprotective efficacy of ORG 2766 was already confirmed in a clinical study in patients with ovarian cancer treated with moderate dosages of cisplatin (Gerritsen van der Hoop *et al.*, 1990).

The mechanism of action of ORG 2766, and other ACTH/α-MSH-derived peptides, is still a subject of study. It has been suggested that the peptide mimics or amplifies an endogenous factor in the regenerative repertoire of the neuron, tipping the balance of degenerative/regenerative forces toward regeneration (Gispen, 1990). This might explain its neuroprotective action in various models of other experimental neuropathies (diabetic neuropathy, Van der Zee *et al.*, 1989; pyridoxine neuropathy, Gispen, 1990; acrylamine neuropathy, Sporel-Özakat *et al.*, 1990).

Concerning the morphological substrate for the decrease in H-SNCV in cisplatin neuropathy, in an electrophysiological and histological study it was shown that treatment with ORG 2766 significantly inhibits both the decrease in H-SNCV in the sciatic nerve and the loss of thick (>10 μm) myelinated fibers in the sural nerve, induced by cisplatin treatment (Bär *et al.*, 1990). As the thickest myelinated nerve fibers are also the fastest conducting fibers, loss of thick myelinated fibers is thought to be responsible for the observed decrease of the conduction velocity in cisplatin-treated animals. The effects of every neuroprotective treatment will ultimately be brought about by protection of these fibers.

The results of the first and second experiment indicate that the calcium entry blocker nimodipine also protects from cisplatin-induced neuropathy. Although oral administration of nimodipine was effective in counteracting the drop in H-SNCV in cisplatin-treated rats (experiment 2) the drawback is that in view of the loss in body weight and decrease in food intake it is difficult to estimate how much the animals in fact have received of this drug. To circumvent the difficulty of food intake by intoxicated rats, the second experiment employed intraperitoneally administered nimodipine. Again neuroprotection was clearly observed (Experiment 3). The initial cisplatin dose regime employed in this experiment (3

mg/kg twice a week) proved to be very debilitating. This became evident after 1 week (seven rats died). After decreasing the dose to 2 mg/kg twice a week the animals remained in better health but the deaths during the last week are probably still attributable to the damage induced in the first week of treatment. Nimodipine treatment had no effect on this aspect of general toxicity, as evidenced by equal survival rates in both the nimodipine- and the vehicle-treated groups.

In the fourth experiment, it was found that nimodipine does not hamper the antitumor activity of cisplatin. This fact is a *sine qua non* for the possible use of this compound in the clinic and was proven before in the case of ORG 2766 (Gerritsen van der Hoop *et al.*, 1988a).

Nimodipine is known to specifically block the calcium channels of the L-type (Triggle *et al.*, 1989). As other Ca-entry blockers from the dihydropyridine type, the drug is known for its vasodilatory effects especially on the cerebrovascular arteries (Heistad and Haws, 1985). However, it was found that nimodipine could enhance neuronal maturation in tissue culture (Azmitia, 1989; Robson and Burgoyne, 1989) and nerve repair following crush lesion of the rat sciatic nerve (Van der Zee *et al.*, 1987). Nimodipine is also found to improve age-induced nervous system function disturbances in rats, such as learning ability, exploratory behavior, and sensorimotor function (Schuurman *et al.*, 1987; Schuurman and Traber, 1989; Van der Zee *et al.*, 1991). As with ORG 2766, the mechanism of action of nimodipine in nerve regeneration is still largely unknown. Blockade of nervous L-type calcium channels could play a role; Calcium influx through these slow reacting but high conductance calcium channels into already compromised (by mechanical, or chemical damage) neurons could potentially lead to an increase of intracellular calcium further compromising cell function and eventually leading to neural degeneration (Schanne *et al.*, 1979; Farber, 1981). Otherwise, the neuroprotection by nimodipine could be due to a better vascularization of damaged neurons and axons. Recently, a study concerning the effects of nimodipine on experimental spinal cord lesions in rats showed a correlation between neuronal functioning and local blood flow in the lesioned area (Fehlings *et al.*, 1989). However, it remains to be shown whether the blockade of L-type calcium channels in neurons themselves, or the vasodilatation in nervous arteries and arterioles, or perhaps both are responsible for the neurotrophic effect. As for the melanocortins, studies concerning the mechanism of neuroprotective action of nimodipine are currently in progress.

We conclude that ORG 2766 as well as nimodipine counteract the neuropathic changes on the sensory nerve conduction velocity in the rat produced by cisplatin intoxication. The protective effect of these agents appears to extend to high-dose cisplatin treatment regimens. Furthermore, we find nimodipine to be effective by both oral and parenteral administration. Given the similarities in the expression of cisplatin-induced neurotoxicity in rats and man and the proven efficacy of ORG 2766 in postponing this neuropathy in man, these findings warrant future clinical trials. On the mechanism of action of both ORG 2766 and nimodipine one may only speculate. However, it is likely that the protective action of these drugs is mediated by different pathways and it would therefore be of interest to investigate the efficacy of combining ORG 2766 and nimodipine.

ACKNOWLEDGMENT

This study was supported by a grant from the Netherlands Cancer Foundation.

REFERENCES

AZMITIA, E. C. (1989). Nimodipine attenuates NMDA- and MNDA-induced toxicity of cultured fetal serotonergic neurons: Evidence for a generic model of calcium toxicity. In *Nimodipine and Central Nervous System*

Function: New Vistas (Traber and Gispen, Eds.), pp. 141–159. Schattauer, Stuttgart/New York.

BÄR, P. R., SCHRAMA, L. H., AND GISPEN, W. H. (1990). Neurotropic effects of ACTH/MSH-like peptides in the peripheral nervous system. In *Neuropeptides, Basics and Perspectives.* (D. de Wied *et al.*, Eds.), pp. 175–211. Elsevier, Amsterdam.

DE JONG, W. H., STEERENBURG, P. A., VOS, J. G., BULTEN, E. J., VERBEEK, F., KRUIZINGA, W., AND RUITENBERG, R. J. (1983). Antitumor activity, induction of cross-resistance, and nephrotoxicity of a new platinum analogue, cis-1,1-diaminomethylcyclohexaneplatinum (II) sulphate, and of cis-diaminedichloroplatinum (II) in an immunocytoma model in the LOU/M rat. *Cancer Res.* **43,** 4927–4934.

DE KONING, P., NEIJT, J. P., JENNEKENS, F. G. I., AND GISPEN, W. H. (1987a). Evaluation of cis-diaminedichloroplatinum (II) (cisplatin) neurotoxicity in rat. *Toxicol. Appl. Pharmacol.* **89,** 81–87.

DE KONING, P., AND GISPEN, W. H. (1987b). ORG 2766 improves functional and electrophysiological aspects of regenerating sciatic nerve in the rat. *Peptides* **8,** 415–422.

DE KONING, P., NEIJT, J. P., JENNEKENS, F. G. I., AND GISPEN, W. H. (1988). ORG 2766 protects from cisplatin-induced neurotoxicity in rats. *Exp. Neurol.* **97,** 746–750.

ELDERSON, A., GERRITSEN VAN DER HOOP, R., HAANSTRA, W., NEIJT, J. P., GISPEN, W. H., AND JENNEKENS, F. G. I. (1989). Vibration perception and thermoperception as quantitative measurements in the monitoring of cisplatin induced neurotoxicity. *J. Neurol. Sci.* **93,** 167–174.

FARBER, J. L. (1981). The role of calcium in cell death. *Life Sci.* **29,** 1289–1295.

FEHLINGS, M. G., TATOR, C. H., AND LINDEN, R. D. (1989). The effect of nimodipine and dextran on axonal function and blood flow following experimental spinal cord injury. *J. Neurosurg.* **71,** 403–416.

GERRITSEN VAN DER HOOP, R., DE KONING, P., BOVEN, E., NEIJT, J. P., JENNEKENS, F. G. I., AND GISPEN, W. H. (1988a). Efficacy of the neuropeptide ORG 2766 in the prevention and treatment of cisplatin-induced neurotoxicity in rats. *Eur. J. Cancer Clin. Oncol.* **24,** 637–642.

GERRITSEN VAN DER HOOP, R., NEIJT, J. P., JENNEKENS, F. G. I., AND GISPEN, W. H. (1988b). Both in normal and high-dose cisplatin treatment ORG 2766 protects from neurotoxicity in rats: Electrophysiological and histological results. In *ENS Satelite Symposium, SanRemo,* 39.

GERRITSEN VAN DER HOOP, R. (1989). *Morphological and Electrophysiological Study of the Effects of Cisplatin and ORG 2766 on Rat Spinal Ganglion Neurons.* Thesis, pp. 54–67. Utrecht.

GERRITSEN VAN DER HOOP, R., VECHT, C. J., VAN DER BURG, M. E. L., ELDERSON, A., BOOGERD, W., HEIMANS, J. J., VRIES, E. P., VAN HOUWELINGEN, J. C., JENNEKENS, F. G. I., GISPEN, W. H., AND NEIJT, J. P. (1990). Prevention of cisplatin neuropathy with an ACTH (4–9) analogue in patients with ovarian cancer. *N. Engl. J. Med.* **322,** 89–94.

GISPEN, W. H., SCHUURMAN, T., AND TRABER, J. (1988). Nimodipine and neural plasticity in the peripheral nervous system of adult and aged rats. In *The Calcium Channel: Structure, Function and Implications* (Morad, Nayler, Kazda, and Schramm, Eds.), pp. 491–502. Springer-Verlag, Berlin/Heidelberg.

GISPEN, W. H. (1990). Therapeutic potential for melanocortins in peripheral nerve disease. *Trends Pharmacol. Sci.* **11,** 221–222.

HEISTAD, D. D., AND HAWS, CH. W. (1985). Effects of nimodipine on cerebral blood flow and cerebral vasoconstrictor responses: Implications for membrane mechanisms. In *Nimodipine: Pharmacological and Clinical Properties* (Betz, Deck, and Hoffmeister, Eds.), pp. 47–53, Schattauer-Verlag, Stuttgart/New York.

OZOLS, R. F. (1989). Cisplatin dose intensity. *Semin. Oncol.* **16**(4, Suppl. 6), 22–30.

REINSTEIN, L., OSTRO, S. S., AND WIERNIK, P. H. (1980). Peripheral neuropathy after cis-platin (II) (DDP) therapy. *Arch. Phys. Med. Rehab.* **61,** 280–282.

ROBSON, S. J., AND BURGOYNE, R. D. (1989). L-Type calcium channels in the regulation of neurite outgrowth from rat dorsal root ganglion neurons in culture. *Neurosci. Lett.* **104,** 110–114.

SCHANNE, F. A. S., KANE, A. B., YOUNG, E. E., AND FARBER, J. L. (1979). Calcium dependence of toxic cell death: A final common pathway. *Science* **206,** 700–702.

SCHUURMAN, T., KLEIN, H., BENEKE, M., AND TRABER, J. (1987). Nimodipine and motor deficits in the aged rat. *Neurosci. Res. Commun.* **1,** 9–15.

SCHUURMAN, T., AND TRABER, J. (1989). Effects of nimodipine on behaviour of old rats. In *Nimodipine and Central Nervous System Function: New Vistas* (Traber and Gispen, Eds.), pp. 195–208. Schattauer, Stuttgart/New York.

SPOREL-ÖZAKAT, E., EDWARDS, P. M., GERRITSEN VAN DER HOOP, R., AND GISPEN, W. H. (1990). An ACTH (4–9) analog ORG 2766 improves recovery from acrylamide neuropathy in rats. *Eur. J. Pharmacol.* **186,** 181–187.

STANLEY, E. F. (1981). Sensory and motor conduction velocities and the latency of the H-reflex during growth of the rat. *Exp. Neurol.* **71,** 497–506.

STRAND, F. L., ROSE, K. J., KING, J. A., SEGARRA, A. C., AND ZUCCARELLI, L. A. (1989). ACTH modulation of nerve development and regeneration. *Prog. Neurobiol.* **33,** 45–85.

THOMPSON, S. W., DAVIS, L. E., KOMFELD, M., HILGERS, R. D., AND STANDEFER, J. C. (1984). Cisplatin neuropathy. *Cancer* **54,** 1269–1275.

TRABER, J., AND GISPEN, W. H. (1989). *Nimodipine and Central Nervous System Function: New Vistas.* Schattauer, Stuttgart/New York.

TRIGGLE, D. J., FERRANTE, J., KWON, Y.-W., SKATTEBØL, A., HAWTHORN, M., LANGS, D. A., AND BANGALORE, R. (1989). 1,4-Dihydropyridine-sensitive neuronal Ca^{2+} channels: Pharmacology and regulation. In *Nimodipine and Central Nervous System Function: New Vistas.* (Traber and Gispen, Eds.), pp. 3–16. Schattauer, Stuttgart/New York.

VAN DER ZEE, C. E. E. M., SCHUURMAN, T., TRABER, J., AND GISPEN, W. H. (1987). Oral administration of nimodipine accelerates functional recovery following peripheral nerve damage in the rat. *Neurosci. Lett.* **83,** 143–148.

VAN DER ZEE, C. E. E. M., NIELANDER, H., VOS, J. P., LOPES DA SILVA, S., VERHAAGEN, J., OESTREICHER, A. B., SCHRAMA, L. H., SCHOTMAN, P., AND GISPEN, W. H. (1989). Expression of growth-associated protein B-50 (GAP-43) in dorsal root ganglia and sciatic nerve during regenerative sprouting. *J. Neurosci.* **10,** 3505–3512.

VAN DER ZEE, C. E. E. M., SCHUURMAN, T., GERRITSEN VAN DER HOOP, R., TRABER, J., AND GISPEN, W. H. (1991). Beneficial effect of nimodipine on peripheral nerve function in aged rats. *Neurobiology aging* **11,** 451–456.

WALSH, T. J., CLARK, A. W., PARHAD, I. M., AND GREEN, W. R. (1982). Neurotoxic effects of cisplatin therapy. *Arch. Neurol.* **39,** 719–720.