Prog. Neuro-Psychopharmacol. & Biol. Psychiat. 1986, Vol. 10, pp. 415–426
Printed in Great Britain.

0278–5846/86 $0.00 + .50

MELANOCORTINS, NEURAL PLASTICITY AND AGING

WILLEM HENDRIK GISPEN, ROBERT L. ISAACSON,[1], BERRY M. SPRUIJT
and DAVID DE WIED

Division of Molecular Neurobiology, Rudolf Magnus Institute for Pharmacology
and Institute of Molecular Biology, State University of Utrecht
Padualaan, CH Utrecht
The Netherlands

[1]Department of Psychology and Center for Neurobehavioral Sciences
University Center at Binghamton
Binghamton, NY U.S.A.

(Final form, February 1986)

Contents

Abstract

Gispen, Willem Hendrik, Robert L. Isaacson, Berry M. Spruijt and David de Wied: Melanocortins, neural plasticity and aging. Prog. Neuro-Psychopharmacol. & Biol. Psychiat., 1986, 10 (3-5): 415-426.

1. Peptides derived from ACHT and α-MSH are known to exert trophic influences on peripheral and central nervous structures.
2. Age-related brain diseases may in part be related to loss of neural plasticity.
3. Melanocortins improve adaptional abilities of the nervous system.
4. Chronic treatment with melanocortins may counteract age-related brain pathology.

Keywords: ACTH, α-MSH, behavioral plasticity, brain aging, nerve regeneration, neural plasticity, neurotrophic effects.

Abbreviations: Adrenocorticotropic hormone (ACTH), Calcium (Ca^{2+}), Dopamine receptor, type 2 (D2), Thousand Dalton measure (kDa), melanocyte-stimulating hormone(s) (MSH) ribonucleic acid (RNA), α-melanocyte-stimulating hormone (α-MSH), Serine (ser), Serotonin receptor, type 2 (S2), Tyrosine (tyr)

1. Introduction

In the past 25 years or so, tremendous insight has been gained with regard to the functions of the melanocortins (ACTH/MSH) on nervous system activities. Various disciplines within the neurosciences have indicated a role of these peptides in brain and behavior, and these investigations have led to an impressive number of functional, adaptive mechanisms that seem to be modulated by the melanocortins (De Wied and Jolles 1982). The adaptive mechanisms in brain and behavior are often described in terms of neural and behavioral plasticity that allow the brain to cope with changing conditions in internal and external environment. It has been proposed that changes in the synaptic plasticity of certain neural networks underlie important cognitive functions such as learning and memory (Lynch and Baudry, 1984). Evidence is accumulating that there is a severe age-related deficit in hippocampal synaptic structure and function that may be related to the loss of cognitive abilities found in some individuals with advanced age (Landfield, 1983; Tielen et al., 1983). However, the anatomical changes found in the hippocampus (changes in neuronal densities, lipofuscin accumulation, the presence and aggregation of hypertrophied astrocytes) are not the only changes associated with advanced age nor is the hippocampus the only area in which such changes occur. Observed changes include decreases of α- and β-adrenergic receptors in the neocortex (Misra et al., 1980; Greenberg and Weiss, 1978), changes in neuronal membrane fluidity and subsequent "availability" of membrane receptors (Cimino et al., 1984), and a host of dopaminergic changes in the basal ganglia and elsewhere (e.g., Demarest et al., 1980; Govoni et al., 1977; McGeer et al., 1977). In people declines in D2 receptors (and S2 serotonin receptors) have demonstrated using positron emission tomography (Wong et al., 1984). Almost every known putative transmitter, in fact, has been shown to exhibit age-related changes and, in addition, reductions of metabolic activities have been demonstrated (e.g., Ferris et al., 1983; Foster et al., 1983). Since the melanocortins have a wide range of physiologic activities that enhance adaptive capabilities they may be a particular importance to age-related cognitive disorders.

A fundamental issue arises from the observation that a specific message site in the melanocortin molecule may induce profound neurotrophic effects, one example of this being its beneficial role in recovery from peripheral nerve damage. In addition, ACTH/MSH-like peptides produce an enhancement of cerebral oxygen consumption and glucose utilization. Therefore, such neuropeptides may improve the adaptational abilities of the nervous system and may be suited for clinical testing for the counteracting of age-related brain pathologies. In the present article, important reasons for testing the efficacy of the melanocortins in providing relief from age-related brain abnormalities will be reviewed.

2. Trophic Effects of Melanocortins

In addition to the elicitation of their specific physiological responses, pituitary peptide hormones like ACTH and MSH (Fig. 1) exert trophic influences enhancing the metabolic activity and the viability of their target cells. Such influences include enhanced blood flow through the target region with consequent increased supply of oxygen and nutrients. Furthermore, there is a well-documented stimulation by these hormones of target cell macromolecular synthesis (RNA/protein). Taken together, such responses represent trophic influences of the pituitary peptide hormones on target cells. One example of this influence is illustrated by the nearly complete atrophy of the adrenal cortex in rats from which the pituitary has been extirpated experimentally.

In line with the notion that part of the brain and behavioral effects of the melanocortins result from peptide actions on neurons and/or glia cells that are similar to those seen in peptide-target cells interactions in peripheral, non-neural tissues (Gispen, 1980), it is not surprising that the removal of the pituitary causes dramatic reductions in rat brain RNA and protein turnover rates (Gispen and Schotman, 1973). Subcutaneous administration of ACTH, or fragments of it that do not affect the endocrine glands, to hypophysectomized rats lead to marked overall increases in the synthesis of these brain macro molecules (Dunn and Schotman, 1981). In addition, chronic treatment with a potent $ACTH_{4-9}$ analog (Org 2766; Fig. 1) results in a highly localized enhancement of glucose utilization in hippocampus, thalamus, and anterior cingulate cortex (McCullock et al., 1982). The

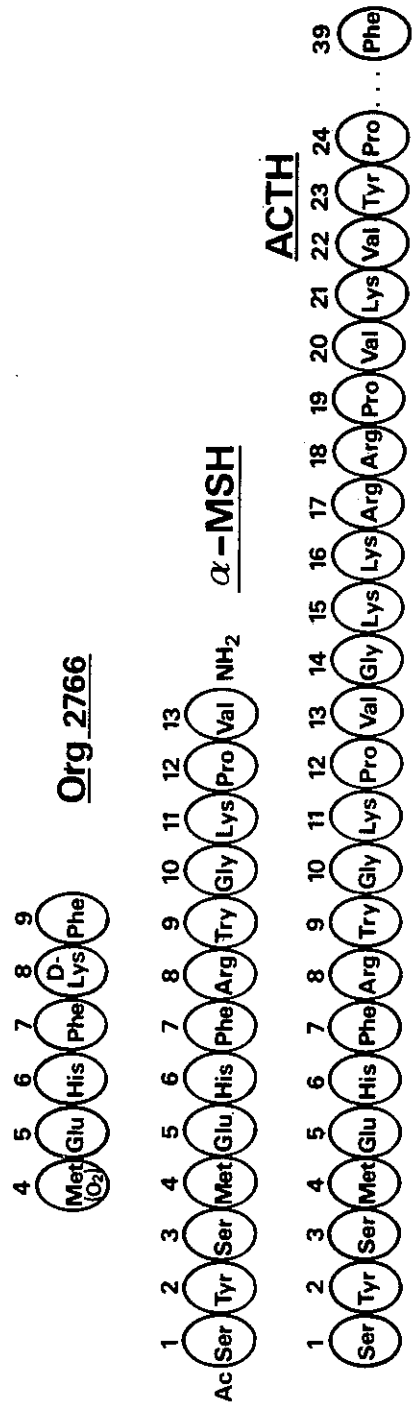

Fig. 1. Primary structure of ACTH, α-MSH and Org 2766.

biological significance of neurotrophic influences of the melanocortins become especially apparent in studies of the facilitation of the development and maturation of the rat central nervous system. This is evidenced by increased fetal brain growth and earlier eye opening in neuropeptide-treated animals (Swaab and Martin, 1981; Van der Helm and de Wied, 1976). Given these neurotrophic properties of the melanocortins, further investigations were needed to discover whether these neuropeptides could support adaptive responses of neural tissue after damage by enhancing the regeneration of fibers that normally represent a portion of the repair mechanisms that occur after damage.

3. Recovery from Peripheral Nerve Damage

Because the histological and functional deterioration found after crushing the sciatic nerve of the rat are well known, this preparation is useful for testing the possible beneficial role(s) that melanocortins may play in the nerve repair process. In fact, previous and present research of several groups have documented a direct effect of melanocortin on the neural aspect of the neuromuscular motor system (Torda and Wolf, 1953; Krivoy, 1970; Strand and Smith, 1980). Strand and Smith (1980) were the first to report that ACTH treatment in rats following nerve crush of the sciatic nerve enhanced recovery of sensorimotor function of the affected limb as measured in foot-flick and toe-spreading tests. ACTH treatment resulted in a more rapid outgrowth of regenerating axons, larger motor endplates, and enhanced occurrence of preterminal branching in the endplate area (Strand and Smith, 1980). In subsequent studies it was shown that neuropeptide treatment selectively enhanced the formation of small motor units (Saint-Côme et al., 1982). Using a pinch test, Verghese et al. (1982) reported that neuropeptide treatment of rats with a crush lesion in the sciatic nerve did not enhance the regeneration of the faster growing sensory axons. However, results obtained by the pinch test procedure may not be representative of the pattern of growth of other sensory and motor axons, ones that subserve the type of sensory information important for that particular test or be the best estimate of the average rate of sensory nerve regeneration, overall.

In a series of experiments the melanocortins facilitation of recovery of sensorimotor functions in the rat after sciatic nerve damage was confirmed (Bijlsma et al., 1981). Detailed structure-activity studies pointed to (1) extra-adrenal effect of the peptides, and (2) a melanotrophic, rather than corticotrophic, action that may be the component responsible for the enhancement of regeneration (Bijlsma et al., 1983c; Fig. 2). This conclusion is derived, in part, from the fact that ACTH/α-MSH$_{6-10}$ and α-MSH are active in the regenerative process, whereas ACTH/α-MSH$_{4-7}$ is not. The synthetic ACTH$_{4-9}$ analog, Org 2766 (Fig. 2) has a number of central nervous system effects similar to those of ACTH$_{4-10}$. In some situations it is 1000x more active than ACTH$_{4-10}$, although its melanotrophic effects are much less than that of MSH itself (Greven and de Wied, 1973). However, in tests of neural regeneration, its trophic activity is equal to that of ACTH$_{4-10}$.

In order for neuropeptide treatment to be maximally effective, the treatment must begin immediately after the surgery. Evidence has been obtained to suggest that there is a critical period in which the neuropeptide treatment is effective that begins with the crush of the nerve and may last 6 to 8 days. The actual time interval probably depends on the particular nerve that is crushed and other factors (Edwards et al., 1984). Subsequent histological studies have found the treatment with melanocortins result in an increase in the number of newly formed neurites at the area of the crush. For some reason, the diameters of the neurites are smaller than those found during regeneration in the vehicle-treated control animals (Bijlsma et al., 1983a, b). These observations may be related to a selective regeneration of small motor units (Saint-Côme et al., 1982).

In summary, the data suggest that the neuropeptide treatment increases the outgrowth of neurites from the crushed nerve that will become both myelinated and unmyelinated fibers (Bijlsma et al., 1983a). The rates of growth of the neurites is apparently not affected. Published data show that there is no effect of the neuropeptide on the process of myelination, itself. This excludes the possibility that the beneficial effect of the neuropeptide treatment is produced by actions on the oligodendroglia producing the regenerating myelin.

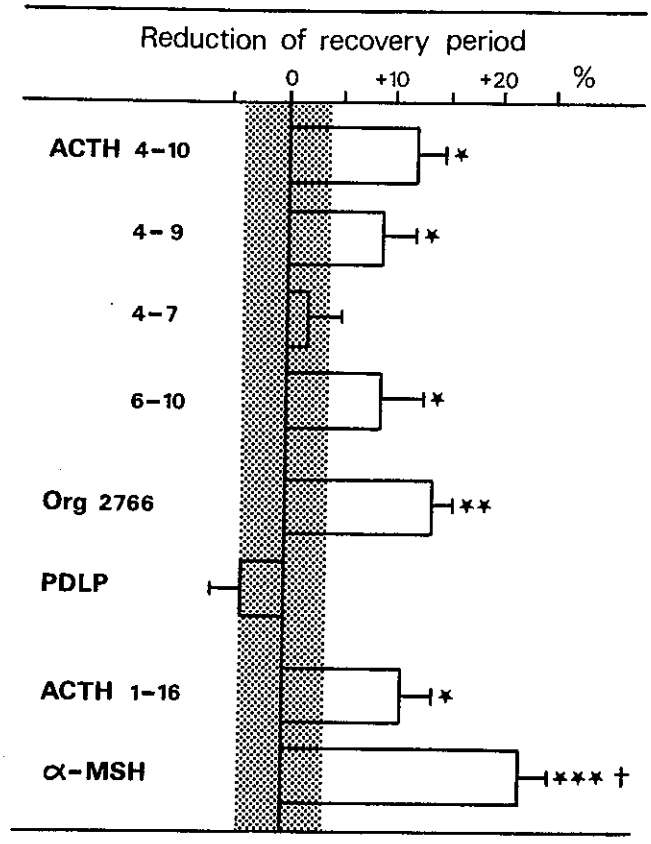

Fig. 2. Melanocortins and return of peripheral nerve function after damage. Functional test, treatment schedule, and surgery can be found in Bijlsma et al. (1983c). Total recovery period 21 days. Peptides were given every other day, 10 μg/0.5 ml saline/subcutaneously. Org 2766 = $ACTH_{4-9}$ analog. PDLP = Phe-D-Lys-Phe (C-terminal part of Org 2766).

In view of the evidence of the stimulating influence of melanocortins on the synthesis of proteins in brain and spinal cord (Dunn and Schotman, 1981; Bijlsma et al., 1984), it has been argued that the enhancement of recovery could be the result of increased availability of structural membrane and cytoskeletal proteins that are required for the formation of the budding growth cones as well (Bijlsma et al., 1984). Detailed analysis of the effect of $ACTH_{4-10}$ on the synthesis of cytoskeletal proteins like tubulin and actin, do not support this view (Edwards et al., 1985a). However, there are a number of alternative mechanisms of neuropeptide actions that could hasten behavioral recovery after nerve crush that must be evaluated in future research.

One attractive hypothesis based on currently available data on the effects of MSH in the peripheral nervous system comes from the work of Edwards et al. (1984). They observed that a specific neurofilament protein with a molecular weight of 150 kDa cross-reacts with an antiserum to α-MSH. Although this antibody reacts only with the ser-tyr amino acids in the N-terminal MSH sequence of neurofilament protein (Shaw et al., 1985), antisera directed to other portions of the MSH peptide in the region of the C-terminal portion appear to stain the filament protein as well (Verhaagen et al., in preparation). Secondly, Politis and Spencer (1983) reported that a humoral factor derived from degenerating nerve tissue around the site of the lesion facilitates the repair of the crushed sciatic nerve. Schlaepfer and Hasler (1979) and Edwards et al. (1985b) showed that crushing of the nerve led to a calcium-activated breakdown of the 150 kDa protein. In addition, it has been shown that the cytosolic fraction of the degenerating, but not the control nerve itself, contained MSH-like activity, as determined in a melanophore dispersion bioassay (Edwards et al., 1984). Therefore, it is possible that the damage to a peripheral nerve could trigger local release of melanotrophic factors that are essential to the repair process. The beneficial effects of treatment with melanocortins of rats with sciatic damage, therefore, is thought to reflect a pharmacologic augmentation of a natural physiological response to the damage, itself (Edwards and Gispen, 1985).

4. Hippocampal Plasticity

In a series of experiments, Landfield and his associates have tested the hypothesis that changes in the neural-endocrine interactions may be of specific relevance to changes in brain regions that contain cytoplasmic and nuclear receptors for the glucocorticoids (Landfield, et al., 1981). From this work it has become possible that certain changes such as an enhancement of astrocyte size and number as well as their dispersion in the hippocampus are related to circulating corticosterone levels. Moreover, in adult rats maintained on high doses of corticosteroids for 6 to 7 months there was enhanced evidence of glia reactivity in comparison to age-matched controls without such treatment. Conversely, in adrenalectomized rats maintained on a low dose of corticosteroids, there was less glial pathology than observed in the intact animals. It was argued that enhanced levels of ACTH induced by the low level of corticosteroids were counteracting the usual changes found in the hippocampus with age. The changes are thought to be the consequence of increased intracellular Ca^{2+} levels induced by the glucocorticoids (Landfield et al., 1986). Landfield measured the effectiveness of chronic administration of Org 277 to aging rats. The Org 2766 is without peripheral effects. He found that after 9 months of treatment with Org 2766 fewer of the usual effects of aging were found when the brains were examined in animals 27 months old. The peptide-treated animals had an increased density of neural cells and fewer reactive astrocytes. In addition, he found that the neuropeptide-treated animals displayed latency times in a reversal learning task that were similar to younger controls and less like the age-matched cohorts (Landfield, 1983). The mechanism by which these effects of the ACTH-related neuropeptides occurs is largely unknown. It is possible that a changed fluidity of synaptosomal membranes may be responsible, at least in part, for the altered neural activities occurring within the hippocampus following neuropeptide administration (Hershkowitz et al., 1982a; Hershkowitz, 1983). ACTH and related peptides may increase apparent lipid fluidity of brain membranes, in particular the synaptic plasma membranes derived from the hippocampus of older rats (Hershkowitz et al., 1982b; Van Dongen et al., 1983). Clearly, additional in vivo data on neuronal membrane properties bearing on the mechanisms through which ACTH treatment may counteract losses in neuroplasticity of aging are needed and thus represent an important area for future research.

5. Recovery from Brain Damage

Presently, several reports have been published that suggest that, with peripheral nerve damage, the effects of damage in the central nervous system may be reduced by treatment with melanocortins and related peptide fragments. Isaacson and Poplawsky (1983, 1985) used the disappearance of hyperemotionality induced by septal area lesions as an index of functional recovery from brain damage. The peptides $ACTH_{4-10}$ and Org 2766, given subcutaneously for four consecutive days beginning immediately after surgery, resulted in a smaller than usual lesion-induced increase in emotionality scores. The Org 2766 treatment also facilitated the return to normal values over subsequent days after surgery. This is shown in Fig. 3. However, the effect of $ACTH_{4-10}$ on emotionality was found only on the first testing day, which was also the last day on which $ACTH_{4-10}$ was given. Reduced emotionality was not found on subsequent test days. However, this may only indicate that the ACTH fragment was not given for a sufficient number of days, since Gispen and his coworkers have found that a series of treatments lasting at least 6, and preferably 8, days after nerve crush must be given in order to find facilitation of recovery (Edwards et al., 1984). Weeks after the daily tests for emotionality given by Isaacson and Poplawsky (1983, 1985), the animals were trained on the two-way active avoidance task. The typical increase in avoidance performance seen in animals with septal lesions was observed in the lesioned animals treated both by Org 2766 or $ACTH_{4-10}$, but only the Org 2766 treatment reduced the number of inter-trial responses that are typical of the septal lesion.

Additional data on the effects of melanocortins on the recovery from brain damage come from studies on the functional recovery after lesions of the parafascicular nucleus in the rat (Nyakas et al., 1985). In these studies, rats were subjected to a daily treatment of either α-MSH, Org 2766, or saline beginning the third day after surgery and lasting for two weeks. After completion of the chronic neuropeptide treatment, the lesioned animals acquired a reversal learning task in a T-maze with fewer errors than did the saline-treated controls. Based on dose-dependent reduction of the reversal learning deficit, α-MSH seemed to be more potent than Org 2766. This conclusion has been supported by the finding that α-MSH, but not Org 2766 (in a relatively high dose), slightly ameliorated the abnormal grasping response induced by the parafascicular lesion by the end of the treatment period. Since acute treatment with Org 2766 or α-MSH does not influence reversal performance in the lesioned animals, it was concluded that the beneficial effect of the neuropeptide treatment could be explained in terms of facilitation of recovery of cognitive functions in rats with bilateral lesions in nucleus parafascicularis. Whether the facilitation of function by melanocortins after central nervous system damage depends on an enhancement of cellular responses involved in the repair mechanisms, as found in the peripheral system, remains to be determined. Nevertheless, these data may serve as a first indication that melanocortins have a beneficial role as trophic factors in the central nervous system after damage.

Other experiments indicated a lessened effect of amygdala damage in the performance of a two-way active avoidance task by administration of ACTH (Bush et al., 1973) and a reduction by Org 2766 of presumed attentional and "working memory" deficits produced by hippocampal lesions (Hannigan and Isaacson, 1985).

6. Behavioral Plasticity

Insight in the role of melanocortins in adaptive behaviors originates from studies by a variety of research groups employing many different behavioral paradigms (for instance: active and passive avoidance behavior, rewarded behavior, discrimination tasks, reversal learning, grooming behavior, sexual and social behaviors, etc.; see de Wied and Jolles, 1982). Prior to the precise localization of peptidergic neurons containing endogeneous melanocortins (Krieger et al., 1980), behavioral studies indicated that the brain had to be regarded as a target for pituitary-peptide hormones and their fragments. de Wied advanced the concept that neuropeptides could be important modulators of neuronal functions and that specific proteolysis of pro-peptides would generate highly selective and more potent peptide configurations that might be involved in local and subtle regulation of brain homeostasis

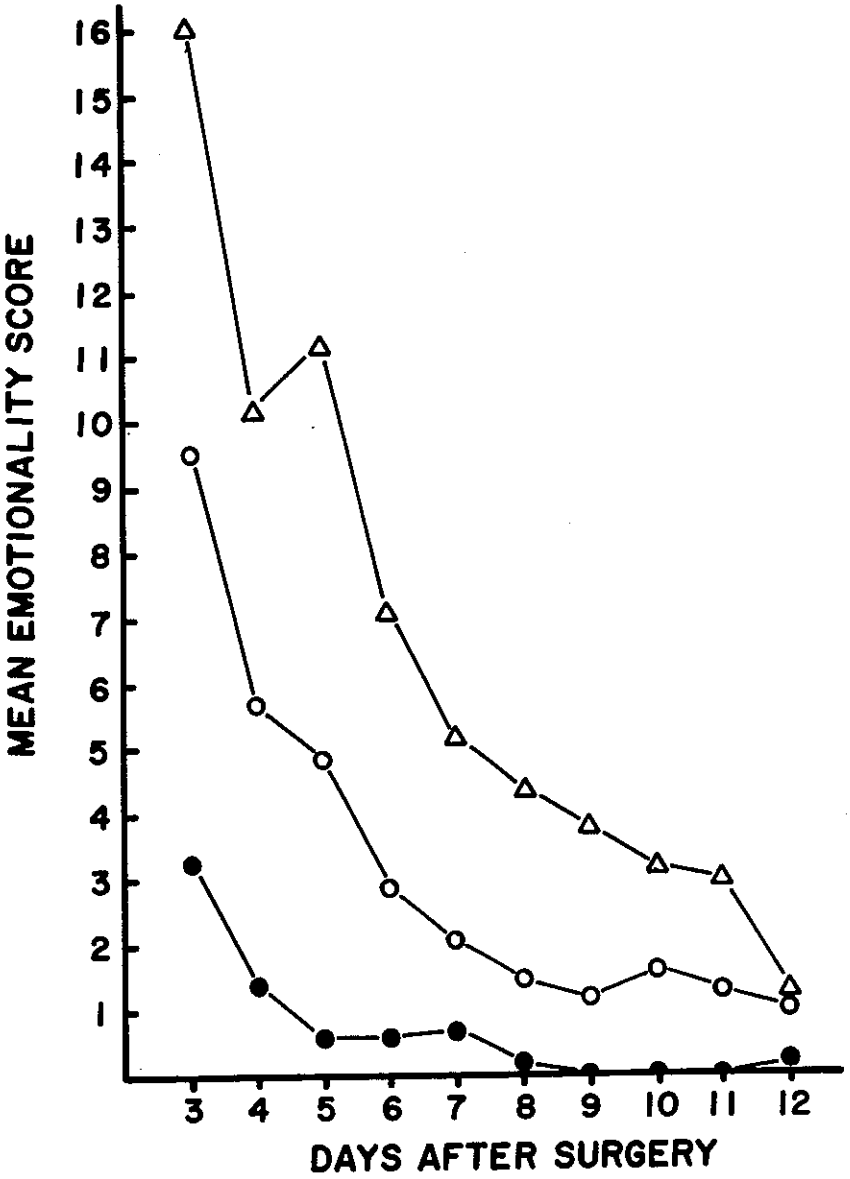

Fig. 3. The mean emotionality scores of animals with septal lesions treated with saline (triangles), animals treated with Org 2766 (open circles), and control animals (filled circles) over repeated tests, starting the third day after surgery. From Isaacson and Poplawsky (1983).

(de Wied, 1969, 1978). With respect to the multiplicity of effects of melanocortins on adaptive behavior, Bohus and de Wied (1980) formulated the unifying mechanism that in part is based on neurophysiological findings that these peptides increased the arousal state in midbrain-limbic structures and increased vigilance (see also, de Wied and Jolles, 1982). They formulated the hypothesis that ACTH and related peptides, by temporarily increasing the state of arousal in certain limbic system and limbic system-related structures of the brain, enhanced the motivational value of environmental stimuli. In such a way the peptides may increase the probability of generating stimulus-specific responses.

Based on the vast amount of animal data suggesting that melanocortins facilitate behavioral adaptation by improving motivation and attention, a variety of studies have been performed investigating the behavioral profile of these peptides in human volunteers and patients. Although our present knowledge on the effectiveness of melanocortins in human behavioral performance is far from complete, a picture emerges that shows a surprisingly good coherence with what is known as these peptides in animal studies. Thus, despite the relatively small number of studies, fragments of ACTH and MSH seem to affect human EEG activity when recorded during stimulation or information processing (Branconnier, 1981). Interestingly, Gaillard (1981) ascribes the improvement in performance of volunteers during a monotonous serial test situation to a peptide effect on task-oriented motivation or sustained attention. Hence, there is a resemblance in the interpretation of both the animal and human data. Although the effects of melanocortins on human behavior are modest, they may have some advantage over presently available psycho-stimulants in that they have fewer adversive side effects.

In view of the human behavioral profile and the neurotrophic properties of melanocortins, it is expected that such peptides may exert beneficial effects on mental performance of the aged human being. Recently, a number of excellent reviews have addressed the role of ACTH-like peptides in elderly animals and people (Pigache and Rigter, 1981; Branconnier, 1981). Employing a serial reaction time test in mildly senile subjects, Branconnier et al. (1979) found that treatment with $ACTH_{4-10}$ caused some suppression of increased reaction times resulting from continuous performance over 15 min. Furthermore, the subjects displayed reduced depression and confusion. This latter aspect of the subchronic peptide treatment is of interest as various authors have reported that chronic treatment of elderly and/or moderate demented human beings with Org 2766 reduced anxiety and depression and enhanced feelings of competence and made the patients more sociable (de Wied and Jolles, 1982). Again there seems a parallel with the animal data, as it has been reported previously that $ACTH_{4-10}$ increases the number of social contacts among rats (Beckwith et al., 1977; File, 1979; Niesink and Van Ree, 1983; Spruijt, 1985).

7. Conclusions

In view of the well-documented effects of melanocortins on neural and behavioral plasticity in animals, it is appropriate to consider their potentiality in human diseases related to loss of brain plasticity and which are manifest with increasing age (Gispen and de Wied, 1984). At present little information is available on possible ameliorating effects of melanocortin treatment of patients with diseases such as senile dementia of the Alzheimer's type. The data so far seem to indicate only small, if any, improvements of the diseased subjects after treatment with melanocortins. The major problem with clinical testing of these non-toxic peptides derived from ACTH and MSH is designing a proper treatment schedule (route, dose, period, etc.) and the choice of the proper group of patients. Especially with respect of the modest, but specific, modulatory effect of melanocortins on brain and behavior, it may be that beneficial effects might be produced only if the peptides are given during the very early phases of the brain pathology. As has been stressed by nearly all contemporary scientists in the field of age-related diseases, early and specific diagnoses are prerequisites for furthering our insight in the disease process. Furthermore, there is a growing body of literature demonstrating a diversity within the Alzheimer's disease category, perhaps the most devastating being that with an early onset (Mayeux et al., 1985). These observations further underscore the urgent need for as early a diagnosis as possible for the age-related dementias.

References

BECKWITH, B.E., SANDMAN, C.A., HOTHERSALL, D. and KASTIN, A.J. (1977) Influence of neonatal injections of α-MSH on learning, memory and attention in rats. Physiol. Behav. 18: 63-71.

BIJLSMA, W.A., JENNEKENS, F.G.I., SCHOTMAN, P. and GISPEN, W.H. (1981) Effects of corticotrophin (ACTH) on recovery of sensorimotor function in the rat: structure-activity study. Eur. J. Pharmacol. 76: 73-79.

BIJLSMA, W.A., VAN ASSELT, E., VELDMAN, H., JENNEKENS, F.G.I., SCHOTMAN, P. and GISPEN, W.H. (1983a) Ultrastructural study of the effect of ACTH(4-10) on nerve regeneration: axons become larger in number and smaller in diameter. Acta Neuropathol. (Berl.) 62: 24-30.

BIJLSMA, W.A., JENNEKENS, F.G.I., SCHOTMAN, P. and GISPEN, W.H. (1983b) Stimulation by ACTH(4-10) of nerve fiber regeneration following sciatic nerve crush. Muscle & Nerve 6: 104-112.

BIJLSMA, W.A., SCHOTMAN, P., JENNEKENS, F.G.I., GISPEN, W.H. and DE WIED, D. (1983c) The enhanced recovery of sensorimotor function in rats is related to the melanotropic moiety of ACTH/MSH neuropeptides. Eur. J. Pharmacol. 92: 231-236.

BIJLSMA, W.A., JENNEKENS, F.G.I., SCHOTMAN, P. and GISPEN, W.H. (1984) Neurotropic factors and regeneration in the peripheral nervous system. Psychoendocrinology 9: 199-215.

BOHUS, B. and DE WIED, D. (1980) Pituitary-adrenal system hormones and adaptive behaviour. In: General, Comparative and Clinical Endocrinology of the Adrenal Cortex, I. Chester Jones and W.H. Henderson (eds), Vol. 3, pp. 265-347. Academic Press, London.

BRANCONNIER, R.J. (1981) The human behavioral pharmacology of the common core heptapeptides. Pharmacol. Ther. 14: 161-175.

BRANCONNIER, R.J., COLE, J.O. and CARDOS, G. (1979) ACTH(4-10) in the amelioration of neuropsychological symptomatology associated with senile organis brain syndrome. Psychopharmacology 61: 161-165.

BUSH, D.F., LOVELY, R.H. and PAGANO, R.R. (1973) Injection of ACTH induces recovery from shuttle-box avoidance deficits in rats with amygdaloid lesions. J. comp. physiol. Psychol. 83: 168-172.

CIMINO, M. VANTINI, G., ALGERI, S., CURATLA, G., PEZZOLI, C. and STRAMENTINOLI, G. (1984) Age-related modification of dopaminergic and β-adrenergic receptor system: restoration to normal activity by modifying membrane fluidity with S-adenosylmethionine. Life Sci. 34: 2029-2039.

DEMAREST, K.T., RIEGLE, G.D. and MOORE, K.E. (1980) Characteristics of dopaminergic neurons in the aged male rat. Neuroendocrinol. 31: 222-227.

DE WIED, D. (1969) Effects of peptide hormones on behavior. In: Frontiers in Neuroendocrinology, W.F. Ganong and L. Martini (eds), pp. 97-140. Oxford University Press, New York.

DE WIED, D. (1978) Psychopathology as a neuropeptide dysfunction. Dev. Neurosci. 4: 113-122.

DE WIED, D. and JOLLES, J. (1982) Neuropeptides derived from proopiomelano cortin: behavioral, physiological and neurochemical effects. Physiol. Rev. 62: 976-1059.

DUNN, A.J. and SCHOTMAN, P. (1981) Effects of ACTH and related peptides on cerebral RNA and protein synthesis. Pharmacol. Ther. 12: 353-372.

EDWARDS, P.M., VAN DER ZEE, C.E.E.M., VERHAAGEN, J., SCHOTMAN, P., JENNEKENS, F.G.I. and GISPEN, W.H. (1984) Evidence that the neurotrophic actions of α-MSH may derive from its ability to mimic actions of a peptide formed in degenerating nerve stumps. J. Neurolog. Sci. 64: 333-340.

EDWARDS, P.M., VERHAAGEN, J., SPIERINGS, T., SCHOTMAN, P., JENNEKENS, F.G.I. and GISPEN, W.H. (1985a) The effect of ACTH(4-10) on protein synthesis, actin and tubulin during regeneration. Brain Res. Bull., in press.

EDWARDS, P.M., VAN DER ZEE, C.E.E.M., VERHAAGEN, J., SCHOTMAN, P., JENNEKENS, F.G.I. and GISPEN, W.H. (1985b) MSH and its analogues in peripheral nerve regeneration. Dutch Fed. Proc., 81.

EDWARDS, P.M. and GISPEN, W.H. (1985) Melanocortin peptides and normal plasticity. In: Senile Dementia of the Alzheimer's Type: Early Diagnosis, Neuropathology and Animal Models, W.H. Gispen and J. Traber (eds). Springer Verlag, Heidelberg, in press.

FERRIS, S.H., DE LEON, M.J., WOLF, A.P., GEORGE, A.E., REISBERG, B., BRODIE, J., GENTES, C., CHRISTMAN, D.R. and FOWLER, J.S. (1983) Regional metabolism and cognitive deficits in aging and senile dementia. In: Aging of the Brain, D. Samuel, S. Algeri, S. Gershon, V.E. Grimm, and G. Toffano (eds), pp. 133-142. Raven Press, New York.

FILE, S.E. (1979) Effects of ACTH(4-10) in the social interaction tests of anxiety. Brain Res. 171: 157-160.
FOSTER, N.L., CHASE, T.M., FEDIO, P., PATRONAS, N.J., BROOKS, R.A. and DI CHIRO, G. (1983) Alzheimer's disease: focal cortical changes shown by positron emission tomography. Neurology 33: 961-965.
GAILLARD, A.W.K. (1981) ACTH analogs and human performance. In: Endogenous Peptides and Learning and Memory Processes, J.L. Martinez, R.A. Jensen, R.B. Messing, H. Rigter and J.L. McGaugh (eds), pp. 181-196. Academic Press, New York.
GISPEN, W.H. (1980) On the neurochemical mechanisms of action of ACTH. Progr. Brain Res. 53: 193-206.
GISPEN, W.H. and SCHOTMAN, P. (1973) Pituitary-adrenal system, learning and performance: some neurochemical aspects. Progr. Brain Res. 39: 443-459.
GISPEN, W.H. and DE WIED, D. (1984) Behavioral aspects of brain aging: the role of neurotrophic peptides. Clin. Neuropharmacol. 7: 16-17.
GOVONI, S., LADDO, P., SPANO, P.F. and TRABUCCHI, M. (1977) Dopamine receptor sensitivity in brain and retina of rats during aging. Brain Res. 138: 565-570.
GREENBERG, L.H. and WEISS, B. (1978) Beta-adrenergic receptors in aged rat brain: reduced number and capacity of pineal gland to develop supersensitivity. Science 201: 61-63.
GREVEN, H.M. and DE WIED, D. (1973) The influence of peptides derived from corticotropin (ACTH) on performance. Structure-activity studies. Progr. Brain Res. 39: 429-442.
HANNIGAN, J.H., JR. and ISAACSON, R.L. (1985) The effects of Org 2766 on the performance of sham, neocortical, and hippocampal lesioned rats in a food search task. Pharm. Biochem. Behav., in press.
HERSHKOWITZ, M. (1983) Mechanisms of brain aging: the role of membrane fluidity. Dev. Neurol. 7: 85-99.
HERSHKOWITZ, M., HERON, D., SAMUEL, D. and SHINITZKY, M. (1982a) The modulation in synaptic protein phosphorylation and receptor binding in synaptic membranes by changes in lipid fluidity: implications for aging. Progr. Brain Res. 56: 419-434.
HERSHKOWITZ, M., ZWIERS, H. and GISPEN, W.H. (1982b) The effect of ACTH on rat brain synaptic plasma membrane lipid fluidity. Biochem. Biophys. Acta 692: 495-497.
ISAACSON, R.L. and POPLAWSKY, A. (1983) An ACTH(4-9) analog (Org 2766) speeds recovery from septal hyperemotionality in the rat. Behav. Neural Biol. 39: 52-59.
ISAACSON, R.L. and POPLAWSKY, A. (1985) ACTH(4-10) produces a transient decrease in septal hyperemotionality. Behav. Neural Biol. 43: 109-113.
KRIEGER, D.T., LIOTTA, A.S., BROWNSTEIN, M.J. and ZIMMERMAN, E.A. (1980) ACTH, β-lipotropin and related peptides in brain, pituitary and blood. Rec. Progr. Hormone Res. 36: 277-344.
KRIVOY, W.A. (1970) Effects of ACTH and related polypeptides on spinal cord. Progr. Brain Res. 32: 108-119.
LANDFIELD, P.W. (1983) Mechanisms of altered normal function during aging. Dev. Neurol. 7: 51-57.
LANDFIELD, P.W., BASKIN, R.K. and PITLER, T.A. (1981) Brain aging correlates: retardation by hormonal-pharmacological treatments. Science 214: 581-584.
LANDFIELD, P.W., PITLER, T.A. and APPLEGATE, M.D. (1986) The aged hippocampus: a model system for studies on mechanisms of behavioral plasticity and brain aging. In: The hippocampus. Vol. 4, R.L. Isaacson and K.H. Pribram (eds). Plenum, New York, in press.
LYNCH, G. and BAUDRY, M. (1984) The biochemistry of memory: a new and specific hypothesis. Science 224: 1057-1063.
MAYEUX, R., STERN, Y. and SPANTON, S. (1985) Heterogeneity in dementia of the Alzheimer type: evidence of subgroups. Neurology 35: 453-461.
McGEER, P.L., McGEER, E.G. and SUZUKI, J.S. (1977) Aging and extrapyramidal function. Arch. Neurol. 34: 33-35.
McCULLOCH, J., KELLY, P.A.T. and VAN DELFT, A.M.L. (1982) Alterations in local cerebral glucose utilitzation during chronic treatment with an ACTH(4-9) analog. Eur. J. Pharmacol. 78: 151-158.
MISRA, C.H., SHELAT, H.S. and SMITH, R.C. (1980) Effect of age on adrenergic and dopaminergic receptor binding in rat brain. Life Sci. 27: 521-526.
NIESINK, R.J.M. and VAN REE, J.M. (1983) Normalizing effect of ACTH(4-9) analog on 'disturbed' social behavior in rats. Science 221: 960-962.
NYAKAS, N., VELDHUIS, D. and DE WIED, D. (1985) Beneficial effect of chronic treatment with Org 2766 and α-MSH on reversal learning of rats with bilateral lesions of the parafascicular area. Brain Res. Bull., in press.

PIGACHE, R.M. and RIGTER, H. (1981) Effects of peptides related to ACTH on mood and vigilance in man. Front. Horm. Res. 8: 193-207.
POITIS, M.J. and SPENCER, P.S. (1983) An in vivo assay of neurotrophic activity. Brain Res. 278: 229-231.
SAINT-COME, C., ACKER, G.R. and STRAND, F. (1982) Peptide influences on the development and degeneration of motor performances. Peptides 3: 439-449.
SCHLAEPFER, W.W. and HASLER, M.B. (1979) Characterization of the calcium-induced disruption of neurofilaments in rat peripheral nerve. Brain Res. 168: 299-309.
SHAW, G., FISCHER, S. and WEBER, K. (1985) α-MSH and neurofilament M-protein share a continuous eeitope but not extended sequences. An explanation for neurofibrillary staining with α-MSH antibodies. FEBS Lett. 181: 343-346.
SPRUIJT, B.M. (1985) ACTH and behavior: mechanisms and function. Ph.D. Thesis, University of Utrecht, Utrecht, The Netherlands.
STRAND, F.L. and SMITH, C.M. (1980) LPH, ACTH, MSH and motor synthesis. Pharmacol. Ther. 11: 509-534.
SWAAB, D.F. and MARTIN, J.T. (1981) Functions of α-melanotropin and other opiomelanocortin peptides in labour, intrauterine growth and brain development. In: Peptides of the Pars Intermedia, Pitman Medical UK, CIBA Foundation Symposia 81: 196-217.
TIELEN, A.M., MOLLEVANGER, W.J., LOPES DA SILVA, F.H. and HOLLANDER, C.F. (1983) Neuronal plasticity in hippocampal slices of extremely old rats. Dev. Neurol. 7: 73-84.
TORDA, C. and WOLF, H.G. (1953) Effect of pituitary hormones, cortisone and adrenalectomy on some aspects of neuromuscular systems and acetylcholine synthesis. Am. J. Physiol. 169: 140-149.
VAN DER HELM-HYLKEMA, H. and DE WIED, D. (1976) Effect of neonatally injected ACTH and ACTH analogs on eye-opening of the rat. Life Sci. 18: 1099-1104.
VAN DONGEN, C.J., HERSHKOWITZ, M., ZWIERS, H., DE LAAT, S. and GISPEN, W.H. (1983) Lipid fluidity and phosphoinositide metabolism in rat brain membranes of age rats: effects of ACTH(1-24). Dev. Neurol. 7: 101-114.
VERGHESE, J.P., BRADLEY, W.G., MITSUMOTO, H. and CHAD, D. (1982) A blind controlled trial of adrenocorticotropin and cerebral gangliosides in nerve regeneration in the rat. Exp. Neurol. 77: 455-458.
WONG, D.F., WAGNER, H.N., JR., DANNALS, R.F., LINKS, J.M., FROST, J.J., RAVERT, H.T., WILSON, A.A., ROSENBAUM, A.E., GJEDDE, A., DOUGLASS, K.H., PETRONIS, J.D., FOLSTEIN, M.F., TOUNG, J.K.T., BURNS, H.D. and KUHAR, M.J. (1984) Effects of age on dopamine and serotonin receptors measured by positron tomography in the living human brain. Science 226: 1393-1396.

Inquiries and reprint requests should be addressed to:

William Hendrik Gispen
Division of Molecular Neurobiology
Institute of Molecular Biology
State University of Utrecht
Padualaan 8, 3584 CH
Utrecht, The Netherlands