INORG. NUCL. CHEM. LETTERS Vol. 8, pp. 581-583, 1972. Pergamon Press. Printed in Great Britain.

PREPARATIVE REDUCTION OF Nb(V) TO Nb(III) IN ETHANOL SOLUTIONS (2) IMPROVEMENTS OF A PREVIOUS SYSTEM

R.Bosselaar, F.Berendes, R.Glaser and H.v.Bemmel
Inorganic Chemistry Department
State University of Utrecht
Croesestraat 77 A, Utrecht
Netherlands

(Received 16 March 1972)

In a recent paper (1) we described a method for the preparative electrochemical reduction of Nb(V) to Nb(III) in superdry, freshly distilled EtOH. The solution contains only a small amount of HCl in contrast to common use in polarography. In that way 97% of the original quantity of Nb(V) could be transformed in Nb(III). The reaction proceeded slowly, however.

We continued our research in order to realise a faster overall reduction rate. The present article describes two alterations of cell model (II) resulting in an important improvement of the gain in Nb(III) concentration versus time. Even formation of Nb(<III) in appreciable concentrations is possible. However a quantitative reduction to Nb(II) is uncertain at this moment.

Improvements of a previous system

The improvements concern the carbon electrodes and the type of diaphragm.

Before the reduction started, the carbon electrodes were now activated. This was performed by heating to dull redness and rapid immersion of the material into cold, nitrogen gas saturated water. This cycle was repeated until a velvet-like rough surface had appeared. The carbon rods were dried in vacuo.

In this way one obtains clean, freshly prepared carbon electrodes with a large effective surface. Identical cells differing in the electrodes only - activated versus inactivated - show an improvement of

about 40% in reaction velocity in favour of the cell with activated electrodes.

Furthermore we presumed that back diffusion between cathodic and anodic compartment did affect the results unfavourably. Therefore several types of diaphragms were tested: dialysis membranes, plastics, sintered glass plates, sintered glass/($NbCl_5$ + EtOH electrolyte)/sintered glass, and ceramic diaphragms. The best results were obtained with a ceramic vessel, containing the anolyte (FIG).

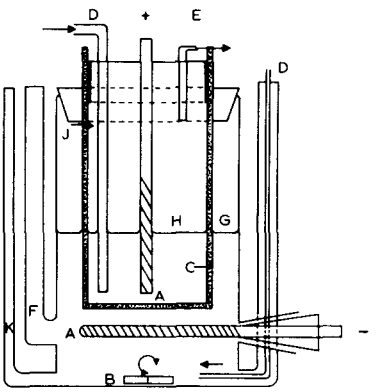

A activated carbon electrodes B magnetic stirrer C ceramic diaphragm D nitrogen gas entries E nitrogen gas outlet F salt bridge entry G catholyte H anolyte J passage for evolved hydrogen gas K entry for analysis.

Cells identical except for the diaphragms - sintered glass versus ceramic - show a 25% increase in reaction rate in favour of the cell with a ceramic vessel. Differences in channel length and sorption phenomena in the materials used may be of influence. At any rate, unwanted back diffusion was absent when using the ceramic diaphragm, whereas the other diaphragms showed a marked darkening (Nb III) on their anolyte side after prolonged electrolysis.

Combination of these improvements practically halved the time needed for electrolysis.

Moreover we could obtain oxidation states lower than Nb(III), since reduced solutions contained Nb reduced up to 120%, corresponding with Nb(2,5) - for the method used see (1)-.

Here we surpassed the extended Nb(x) zone, which is indicated by $2,67 < x < 3,13$ (2). This is interesting since it reveals again that clustering is not of great importance under the described circumstances. It is premature, however, to suppose that a quantitative reduction of Nb(V) to Nb(II) in preparative concentrations is possible.

The electrolysis may be continued until a negativation of the cathodic potential is observed. To prevent halting of the electrolysis by shortage of HCl, a small quantity of it may be introduced into the solution before electrolysis. For example, for a solution containing 8 gr. $NbCl_5$/200 ml. EtOH, 300 ml. HCl gas is already sufficient. The electrolysis is continued until the negativation is about 0,6 V. Note: due to evaporation of EtOH, it is necessary to check the content of I_2 in the standard I_2/EtOH solution.

ACKNOWLEDGEMENTS

These investigations were supported in part by the Netherlands Foundation for Chemical Research (SON).
The authors thank Prof.Dr.W.van Gool and Dr.G.H.J.Broers for corrections.

LITERATURE

1. R.BOSSELAAR, B.G.van der HEYDEN and Miss R.MIERAS, Inorg.Nucl. Chem.Letters, 7, 1199 (1971).
2. H.SCHÄFER, K.D.DOHMANN, Z.Anorg.Allgem.Chemie, 339, 155 (1959).