pH-DEPENDENCE OF BACTERIOCHLOROPHYLL FLUORESCENCE IN AQUEOUS EXTRACTS OF PURPLE BACTERIA

by

J. B. THOMAS, J. C. GOEDHEER AND J. G. KOMEN*

Biophysical Research Group Utrecht-Delft, Utrecht, under the direction of A. J. Kluyver, Delft, and J. M. W. Milatz, Utrecht (The Netherlands)

INTRODUCTION

In a preceding paper[1] it was confirmed that the bacteriochlorophyll types B 890, B 850 and B 800[2,3] are differently affected by low pH. It was furthermore shown that the intensity of this effect depends for each type on the bacterial species in which it occurs. It was concluded that, most probably, the proteinaceous bearer of the pigment predominantly determines the *in vivo* spectrum. This conclusion is in agreement with a suggestion already made by WASSINK, KATZ AND DORRESTEIN[4] that the *in vivo* infrared absorption bands of bacteriochlorophyll might well represent complexes of one and the same pigment with three different proteins.

However, as RABINOWITCH[5] mentioned and as was remarked in our previous paper, it remains possible that also other phenomena such as the occurrence of several isomeric or tautomeric forms, small differences in chemical composition or in the reduction level of bacteriochlorophyll contribute to the spectrum.

It is well known that porphyrins are highly specific with regard to the pH-dependence of their fluorescence. According to FINK AND HOERBURGER[6–8], and GOODWIN, KOSKI AND OWENS[9] this property even enables identification of these pigments.

In the living state, fluorescence of the chlorophylls is much weaker than in true solutions. In the colloidal state fluorescence is absent. The fact that the *in vivo* fluorescence is only weak while, in this state, the chlorophylls are bound to some bearer may suggest that this bearer influences the fluorescence of the pigment. If so, this fluorescence may be affected by inducing changes in the bearer molecule. Since the bearer will be of a proteinaceous nature, such changes may be effectuated by varying the pH. Consequently, if the pH is varied, a twofold effect on the fluorescence may occur; a direct as well as an indirect effect induced via the bearer molecule. This consideration seems to open up the possibility of getting more insight into the nature of the individual bacteriochlorophyll types.

B 800 and B 850 transfer absorbed energy to B 890 which fluoresces exclusively[2,3]. It is true that, after elimination of the possibility of energy transfer to B 890, by heat treatment, B 850 fluorescence can be observed. However, this procedure renders the B 850 type labile so that it cannot be applied here. In consequence it is

* Died 17th June, 1955

References p. 348.

only possible to study the influence of pH on the fluorescence of B 850 and B 800 in an indirect way. The fluorescence yield of these pigment types is also a function of energy transfer to B 890. If corrections for changes of absorption, or concentration of the molecules, of the various types are applied, and the B 890 fluorescence is not quenched below measurability, it is possible to determine the magnitude of this energy flow as a function of pH. Thus, if each type is irradiated separately, it is possible to study the pH-dependence of fluorescence for B 890 directly, while for both other types this influence may be observable as an effect superimposed on the B 890 fluorescence response to pH.

The present study deals with experiments of this type.

MATERIAL

Aqueous extracts from the Thiorhodacea *Chromatium* strain D and the Athiorhodaceae *Rhodopseudomonas spheroides* and *Rhodospirillum rubrum* strain 4 were used. The extracts were samples of those described earlier[1] and used in a concomitant study on pH-induced absorption changes. For details concerning cultivation of the bacteria and preparation of the extracts we may refer to this paper.

METHODS

Apparatus. The apparatus used for fluorescence measurements is shown in Fig. 1. A beam emitted by the incandescent aeroplane lamp I is interrupted by a rotating sector disc M and made parallel by the lens L_1. It then passes an interference filter F_1 and is focussed by L_2 on the bacterial extract in one of the cuvettes C, or on the reference plate R, mounted on a movable slide S. Part of the fluorescent light is focussed by L_3 on an infrared sensitive photomultiplier P which is cooled with liquid air. The modulated photo-current is amplified by A and fed into an a.c. mirror galvanometer G. The filters F_2 and F_3 eliminated scattered light. For F_2 a Kodak Wratten filter 87 was used. Except for a 10–15 fold higher concentration, the contents of the 0.5 cm filter cuvette F_3 consisted of the same bacterial extract as used in the irradiated cuvettes C. In this way the ratio of fluorescent light to scattered light entering the photomultiplier was increased for *Chromatium* and *Rhodopseudomonas* approximately 9, 11, and 30 fold for the wavelengths 880, 860, and 802 mμ respectively. The optical axis of the beam of fluorescent light was adjusted nearly perpendicularly to the front side of the cuvettes C. Thus, the light reflected by the glass walls of these cuvettes could not enter the lens L_3. D_1 and D_2 represent diaphragms. Sh indicates a shutter.

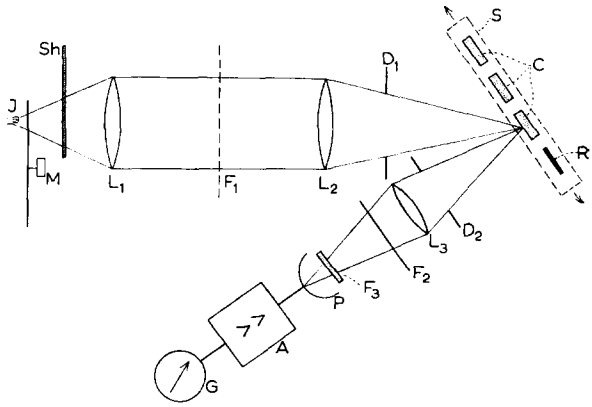

Fig. 1. Scheme of the apparatus.

Filling of the cuvettes. The three 1 cm cuvettes C, volume 5 ml, were filled with 4.5 ml buffer solution of the required pH each. Then an amount of bacterial extract, constant for each experiment, was added to each cuvette by means of a micropipette. This amount depended on the concentration of the extracts, and varied between 0.1 and 0.2 ml. If this was done carefully no mixing occurred. Next, glass covers were placed on the cuvettes. Then, the cuvettes were shaken as quickly as possible until complete mixing was obtained and, at the same time, a stopwatch was started. Immediately afterwards the infrared absorption spectra were measured. Finally, the cuvettes were mounted on the movable slide S. The fluorescence measurements were started 10 minutes after mixing. They were repeated 10 minutes later. After finishing the second series of readings the infrared absorption spectra were redetermined.

Course of the experiment. Ten minutes after mixing the cuvettes were shaken vigorously. The

References p. 348.

extracts of different pH as well as the reference plate were successively placed in the monochromatic light beam isolated by the GAB interference filter 802 mμ and the deflection of the galvanometer G was read. Next the cuvettes were shaken again and the procedure was repeated with the filters 860 and 880 mμ respectively. After 10 minutes the complete series of measurements was repeated in the same sequence.

EXPERIMENTS NEEDED FOR DETERMINATION OF CORRECTIONS

In order to correlate the measured photocurrent with the fluorescence intensity, the following corrections were applied. It may be remarked at once that this technique is based on the assumption that fluorescence intensity per particle is proportional to the absorbed amount of light.

a. Correction for slow fluctuations of the sensibility of the apparatus. After sliding the reference plate into the light beam, the galvanometer deflection was measured after each series of readings. In this way slight fluctuations of the apparatus sensitivity could be eliminated.

b. Correction for scattered light. Owing to pH variations the turbidity of the extract varied. The correction was approximated as follows. The ratio of the galvanometer deflection shown by the reference plate to that shown by the extract was measured in the presence, ratio Q_1, and in the absence, ratio Q_2 of the "bacterial filter" F_3. In the latter case the measured light was assumed to be mainly composed of scattered light due to reflection by the cuvette glass walls and scattering by the suspended particles. In the presence of F_3 the scattered light was absorbed considerably. Thus the deflection of the galvanometer was due to both fluorescence and the remaining part of the scattered light. Since the major part of the fluorescence was also absorbed when using bacterial filters of still higher concentrations, it was impossible to eliminate the scattered light quantitatively. Consequently the fluorescence intensity was calculated according to the formula

$$I_{\text{fluorescence}} = R_1(Q_1 - Q_2)$$

in which R_1 represents the amount of reflection from the reference plate. By varying the amplification the R_1 values were equalised when measuring Q_1 and Q_2.

The fraction of scattered light due to reflections of the glass walls was evaluated by computing the ratio of the galvanometer deflections with the cuvette containing

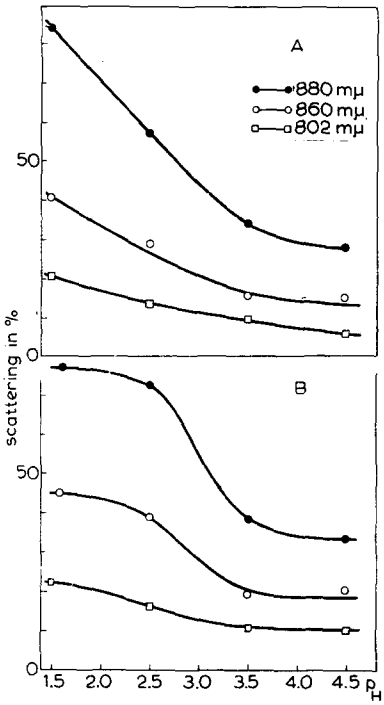

Fig. 2. pH-dependence of light scattering in an aqueous *Chromatium* extract. *A*: Ten minutes after mixing. *B*: Twenty minutes after mixing.

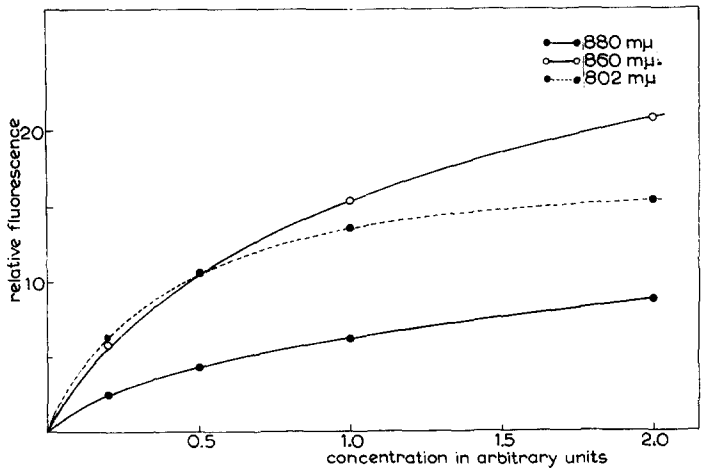

Fig. 3. Relation between concentration and fluorescence of an aqueous *Chromatium* extract.

References p. 348.

bacterial extract and water respectively. In this way it is possible to calculate the intrinsic scattering variations due to concentration effects. Fig. 2 gives an example for one of the extracts.

c. Absorption correction. Absorption is influenced by slight variations in the pigment concentration of the various samples, and pH-induced spectral fluctuations. Moreover, a change of the distribution of absorption in the cuvettes C will affect the magnitude of the photocurrent owing to altered self-absorption of the fluorescent light and changes of intensity distributions on the photocathode.

In order to obtain an approximate value for this correction the absorption was changed by varying the extract concentration at pH 5.0 and studying the relation between concentration and fluorescence intensity. After applying corrections for scattered light, as outlined above, these values were plotted. A smooth curve was drawn through these points and was used for calibration. An example is presented in Fig. 3.

RESULTS

Eight experiments were done with *Chromatium* extracts. An example of these is shown in Fig. 4. Though the absorption spectra showed marked variations (*cf.*[1]), the results of all fluorescence experiments coincided. The B 890, B 850 and B 800 curves run parallel. Though this occurred in all experiments and in the same sequence, the differences were not considered to be significant.

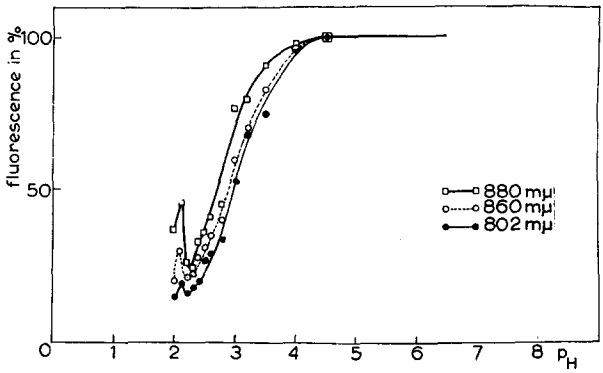

Fig. 4. pH-dependence of fluorescence of an aqueous *Chromatium* extract.

The fluorescence yield is not affected by pH above 4.5. This was checked up to pH 11.0. At decreasing pH this yield drops down to about 20 % at pH 2.3–2.5. On further decrease of the pH either a short rise or a retardation of the decline down to pH 2.0 was observed. Below this pH the fluorescence yield declined at a higher rate again.

At pH 4.0 and below the extracts flocculated.

Apart from the fact that fluorescence is equally affected for the three types the situation was different with *Rhodospeudomonas* extracts. Three experiments were carried out. An example is shown in Fig. 5. The behaviour of these extracts was much more irregular than that of *Chromatium* preparations. A slow decline of the fluorescence yield from pH 4.5 to pH 1.0 is shown. In the other experiments this decline was slower while above pH 5.0 it was absent. However, from all experiments it is obvious that down to pH 1.0 no sharp decline occurs.

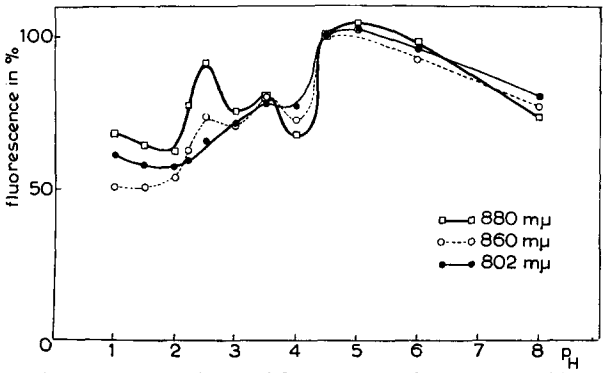

Fig. 5. pH-dependence of fluorescence of an aqueous *Rhodopseudomonas spheroides* extract.

References p. 348.

The extracts flocculated between pH 4.5 and 3.5.

With *Rhodospirillum rubrum* extracts three experiments were carried out yielding identical results. One of these experiments is shown in Fig. 6. It concerns the B 890 type. The fluorescence drop between pH 3.5 and 3.2 was not observed in all experiments. Most probably, this effect was due to irreproducible and rapid scattering changes caused by flocculation. In the insert an additional experiment, in which the B 800 activity was also studied, is shown. Here, for instance, the fluorescence decline between the mentioned pH values is absent. In the evaluation of the results this drop is disregarded. However, all experiments coincided with regard to the relatively small effect of pH down to 2.0; below this pH fluorescence declines sharply. The same is true of the B 800 activity.

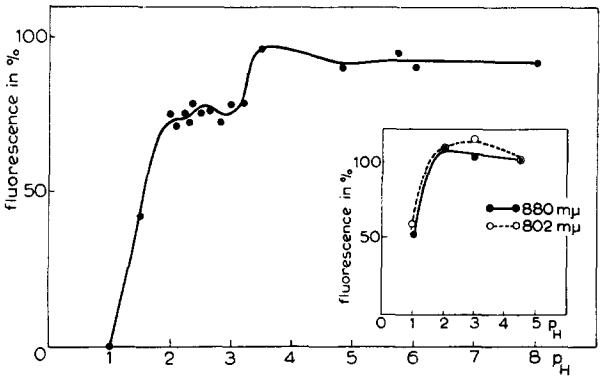

Fig. 6. pH-dependence of fluorescence of an aqueous *Rhodospirillum rubrum* extract.

Flocculation of the extracts occurred between pH 4.5 and 4.0.

In Table I the results obtained are summarised and compared with pH-induced absorption changes already published[1].

DISCUSSION

Comparison of the data from Table I shows that changes in absorption and fluorescence per quantum absorbed are not influenced by flocculation phenomena. Consequently, these alterations of the pigment-bearing particle do not cause noticeable variations of the pigment properties in question. Such a conclusion was also drawn

TABLE I

pH-INDUCED CHANGES IN THE NATURAL BACTERIOCHLOROPHYLL-BEARER COMPLEX

1 *Organism*	2 *Bacteriochlorophyll type present*	3 *pH at which fluorescence starts to decline*	4 *pH at which absorption starts to decline*	5 *Reaction of absorption to 1–2 hours at pH 1.0*	6 *Flocculation pH-range*
Chromatium D	B 890	4.5	4.5	considerably decreased	
	B 850	4.5	4.5	considerably decreased	4.0–<1.0
	B 800	4.5	4.5	relatively constant*	
Rhodopseudomonas spheroides	B 890	<1.0	<1.0	considerably decreased	
	B 850	<1.0	<1.0	relatively constant	4.5–3.5
	B 800	<1.0	<1.0	considerably decreased	
Rhodospirillum rubrum	B 890	2.0	<1.0	slightly decreased	
	B 800	2.0	3.5	considerably decreased	4.6–4.0

* Constancy probably due to a combination of slow decrease of B 800 absorption and simultaneous formation of an 830 mμ absorption band, *cf.*[1].

References p. 348.

by KOMEN[10] who did not observe spectral changes in aqueous *Chromatium* extracts after addition of urea, an agent which strongly denaturates proteins. He suggested that the spectral influence of the bearer molecule is restricted to the pigment-bearer bond or its immediate environment.

The divergence of the flocculation ranges for extracts from the studied strains suggests the presence of different proteins. Nevertheless, *Chromatium* and *Rhodopseudomonas* show nearly the same absorption spectrum. In terms of the above suggestion this phenomenon can be explained by the assumption that in the different proteins, or combination of proteins, of these bacteria the same types of pigment-bearer bonds occur. This may be only partly true for *Rhodospirillum rubrum* where B 850 is absent.

Apart from inducing flocculation which influences neither absorption nor fluorescence, pH also affects the latter properties provided its value is sufficiently prolonged.

It seems possible, *cf.* [10–12], to explain the presence of the bacteriochlorophyll types in terms of association phenomena. However, as discussed earlier[1], the pH-induced spectral changes of the natural pigment-bearer complex, *cf.* Table I columns 4 and 5, seem to favor the assumption that some influence from the bearer on the pigment determines the *in vivo* spectrum. Influence of the bearer on the pigment is probably also demonstrated by the fact that bacteriochlorophyll in the natural state is light-stable while in organic solution it is not. Whether this type of influence, is the same as that which is suggested to be responsible for the determination of the *in vivo* spectrum remains doubtful.

However, if the effects in question are a function of certain bearer properties it seems plausible to explain the different pH-dependence of absorption and fluorescence in the studied strains in terms of different bearer influences. The relatively large differences of the natural pigment complexes already mentioned might also suggest that the different bacteria contain different bacteriochlorophylls. However, if in connection with these differences, the identity of the absorption spectra of bacterial extracts in organic solvents is considered, the former explanation seems preferable.

This would imply that functional properties of bacteriochlorophyll are also influenced by the natural bearer of this pigment.

In *Rhodospirillum rubrum* the fluorescence per quantum absorbed is affected at higher pH than the absorption. This phenomenon might suggest that the fluorescence drop below pH 2.0 is a porphyrin property. In this connection it may be recalled, that the rate of decline of fluorescence in *Chromatium* increased below the same pH. In *Rhodopseudomonas*, however, a decrease of the fluorescence yield was not observed down to pH 1.0. Thus it is impossible to establish in this way the fluorescence reaction of the pigment proper. FINK AND HOERBURGER[6–8] examined the fluorescence dependence on pH for water-soluble porphyrins. Since, however, bacteriochlorophyll is insoluble in water, the pH influence could not be studied on the isolated pigment.

From the point of view of information about the nature of the various bacteriochlorophyll types the fluorescence experiments are inconclusive; the observed equality of pH-induced fluorescence changes of the various types occurring in the same species may be due either to a limiting effect of the B 890 reaction or to an equal response to pH of these types. To answer this question as well as to check the validity of the above considerations further study is needed.

References p. 348.

SUMMARY

The pH-dependence of the bacteriochlorophyll fluorescence in aqueous extracts from *Chromatium* strain D, *Rhodopseudomonas spheroides*, and *Rhodospirillum rubrum* stain 4 was studied.

This dependence varied for the various species.

Within the same species no different fluorescence responses to pH changes were observed for the various bacteriochlorophyll types.

The results are discussed in connection with those from an earlier study[1].

REFERENCES

1 J. B. THOMAS, J. C. GOEDHEER AND J. G. KOMEN, *Biochim. Biophys. Acta*, 22 (1956) 1.
2 L. N. M. DUYSENS, *Nature*, 168 (1951) 548.
3 L. N. M. DUYSENS, *Thesis*, Utrecht, (1952).
4 E. C. WASSINK, E. KATZ AND R. DORRESTEIN, *Enzymologia*, 7 (1939) 113.
5 E. I. RABINOWITCH, *Photosynthesis and Related Processes*, Vol. II, Part 1, Interscience Publ., New York, 1951, p. 704.
6 H. FINK AND W. HOERBURGER, *Z. physiol. Chem.*, 218 (1933) 181.
7 H. FINK AND W. HOERBURGER, *Z. physiol. Chem.*, 220 (1933) 123.
8 H. FINK AND W. HOERBURGER, *Z. physiol. Chem.*, 225 (1934) 49.
9 R. H. GOODWIN, V. M. KOSKI AND O. v. H. OEWNS, *Am. J. Botany*, 38 (1951) 629.
10 J. G. KOMEN, *Internal Rept. Biophys. Research Group Utrecht-Delft*, M 3609, 1952.
11 A. S. HOLT AND E. E. JACOBS, *Am. J. Botany*, 41 (1954) 710.
12 E. E. JACOBS, A. E. VATTER AND A. S. HOLT, *Arch. Biochem. Biophys.*, 53 (1954) 228.

Received February 9th, 1956

THE APURINIC ACIDS FROM DEOXYRIBONUCLEIC ACID FRACTIONS*

by

M. E. HODES** AND ERWIN CHARGAFF

Cell Chemistry Laboratory, Department of Biochemistry, College of Physicians and Surgeons, Columbia University, New York (U.S.A.)

We continue here our studies on the formation, composition and degradation of apurinic acids. It has been proposed to use this designation for the non-dialyzable product of the carefully controlled acid hydrolysis of a deoxyribonucleic acid, in which the removal of the purines is accompanied by neither the loss of nucleic acid phosphorus nor the impairment of the original interpyrimidine ratios[1]. Previous studies from this laboratory have dealt with some of the properties of apurinic acid preparations from calf thymus deoxyribonucleic acid[1,2], with their behavior as the substrate of pancreatic deoxyribonuclease[3,4], with their usefulness as intermediates in the search for trace pyrimidines in deoxypentose nucleic acids[1], and, finally, with

* This work was supported by research grants from the National Institutes of Health, U.S. Public Health Service, and the Rockefeller Foundation.

** Postdoctorate Research Fellow, U.S. Public Health Service. Present address, First (Columbia University) Research Service, Goldwater Memorial Hospital, New York 17, N.Y. This report is in part from a dissertation submitted by M. E. HODES, in partial fulfilment of the requirements for the degree of Doctor of Philosophy in the Faculty of Pure Science, Columbia University.

References p. 360.